# Application for Planning Approval

***Land Use Planning and Approvals Act 1993***

APPLICATION NO.

**DA2023/168**

LOCATION OF AFFECTED AREA

**LOT 1 GREENBANKS ROAD, BRIDGEWATER (LOT 104)**

DESCRIPTION OF DEVELOPMENT PROPOSAL

**MANUFACTURING & PROCESSING (POD HOME MANUFACTURING)**

A COPY OF THE DEVELOPMENT APPLICATION MAY BE VIEWED AT www.brighton.tas.gov.au AND AT THE COUNCIL OFFICES, 1 TIVOLI ROAD, OLD BEACH, BETWEEN 8:15 A.M. AND 4:45 P.M., MONDAY TO FRIDAY OR VIA THE QR CODE BELOW. ANY PERSON MAY MAKE WRITTEN REPRESENTATIONS CONCERNING AN APPLICATION UNTIL 4:45 P.M. ON **04/03/2024**. ADDRESSED TO THE GENERAL MANAGER AT 1 TIVOLI ROAD, OLD BEACH, 7017 OR BY EMAIL AT development@brighton.tas.gov.au.
REPRESENTATIONS SHOULD INCLUDE A DAYTIME TELEPHONE NUMBER TO ALLOW COUNCIL OFFICERS TO DISCUSS, IF NECESSARY, ANY MATTERS RAISED.

**JAMES DRYBURGH**
**General Manager**

SCAN ME

Brighton going places

# Workshop and Offices

PROJECT SPECIFIC:

Paul Sutcliffe

Lot 1 Greenbanks Road

## Brighton

Tasmanian Planning Scheme

Title Reference : Vol 185054 / Folio 01

**NCC DEEMED TO SATISFY** Mr Marcus Ralph CC1317F
Climate Zone 7

## SITE INFORMATION

Lot: **01**
Title: **185054 folio 01**
Land Size: 10000.00 sqm

Council: **Brighton Council**
Zoning: 15.0 General Industrial

Overlays:
D.A APPROVAL:
BAL:
WIND CLASSISIFCATION :
CLIMATE ZONE: 7
ENERGY RATING :Na
BUILDING CLASSISIFCATION: tba

| Layout | Drawing ID | Drawing Name | Last Updated | Scale |
|---|---|---|---|---|
| **948-01 Project Information** | | | | |
| | 1 | Basement | 9/02/2024 10:27 AM | 1:155.90 |
| | 2 | Basement | 9/02/2024 10:28 AM | 1:0.86 |
| | 3 | Basement | 9/02/2024 10:27 AM | 1:2534.30 |
| **948-02 Site Layout** | | | | |
| | 1 | Basement | 9/02/2024 10:27 AM | 1:100 |
| | 2 | Basement | 9/02/2024 10:27 AM | 1:100 |
| | 3 | Basement | 9/02/2024 10:27 AM | 1:200 |
| **948-03 Sub-Division** | | | | |
| | 1 | Basement | 9/02/2024 10:27 AM | 1:1139.23 |
| **948-04 Dimensions** | | | | |
| | 1 | Basement | 9/02/2024 10:27 AM | 1:100 |
| **948-05 Proposed Plan** | | | | |
| | 1 | Basement | 9/02/2024 10:27 AM | 1:100 |
| **948-06 Plan 1:200** | | | | |
| | 1 | Basement | 9/02/2024 10:27 AM | 1:200 |
| **948-07 Elevations** | | | | |
| | 1 | Basement | 9/02/2024 10:27 AM | 1:100 |
| | 2 | Basement | 9/02/2024 10:28 AM | 1:100 |
| | 3 | Basement | 9/02/2024 10:28 AM | 1:200 |
| | 4 | Basement | 9/02/2024 10:27 AM | 1:200 |
| **948-08 Elevations** | | | | |
| | 1 | Basement | 9/02/2024 10:28 AM | 1:200 |
| | 2 | Basement | 9/02/2024 10:28 AM | 1:100 |
| | 3 | Basement | 9/02/2024 10:28 AM | 1:143.55 |
| | 4 | Basement | 9/02/2024 10:28 AM | 1:100 |
| **948-09 Generic Perspective** | | | | |
| | 1 | Basement | 9/02/2024 10:27 AM | 1:100 |
| | 2 | Basement | 9/02/2024 10:28 AM | 1:201.98 |
| | 3 | Basement | 9/02/2024 10:27 AM | 1:62.01 |
| | 4 | Basement | 9/02/2024 10:27 AM | 1:62.01 |
| | 5 | Basement | 9/02/2024 10:27 AM | 1:62.01 |
| | 6 | Basement | 9/02/2024 10:27 AM | 1:62.01 |
| | 7 | Basement | 9/02/2024 10:27 AM | 1:62.01 |
| | 8 | Basement | 9/02/2024 10:27 AM | 1:62.01 |
| | 9 | Basement | 9/02/2024 10:27 AM | 1:62.01 |
| **948-10 Driveway Layout** | | | | |
| | 1 | Basement | 9/02/2024 10:27 AM | 1:200 |
| **948-11 Landscape Plan** | | | | |
| | 1 | Basement | 9/02/2024 10:27 AM | 1:200 |
| **948-12 Turning Template** | | | | |
| | 1 | Basement | 9/02/2024 10:27 AM | 1:200 |
| **948-13 Turning Template** | | | | |
| | 1 | Basement | 9/02/2024 10:27 AM | 1:200 |
| **948-14 Turning Template** | | | | |
| | 1 | Basement | 9/02/2024 10:27 AM | 1:200 |
| **948-15 Turning Template** | | | | |
| | 1 | Basement | 9/02/2024 10:27 AM | 1:200 |
| **948-16 Long Section** | | | | |
| | 1 | Basement | 9/02/2024 10:27 AM | 1:100 |
| | 2 | Basement | 9/02/2024 10:27 AM | 1:200 |
| **948-17 Stormwater Management** | | | | |
| | 1 | Basement | 9/02/2024 10:27 AM | 1:200 |

ARTIST IMPRESSION

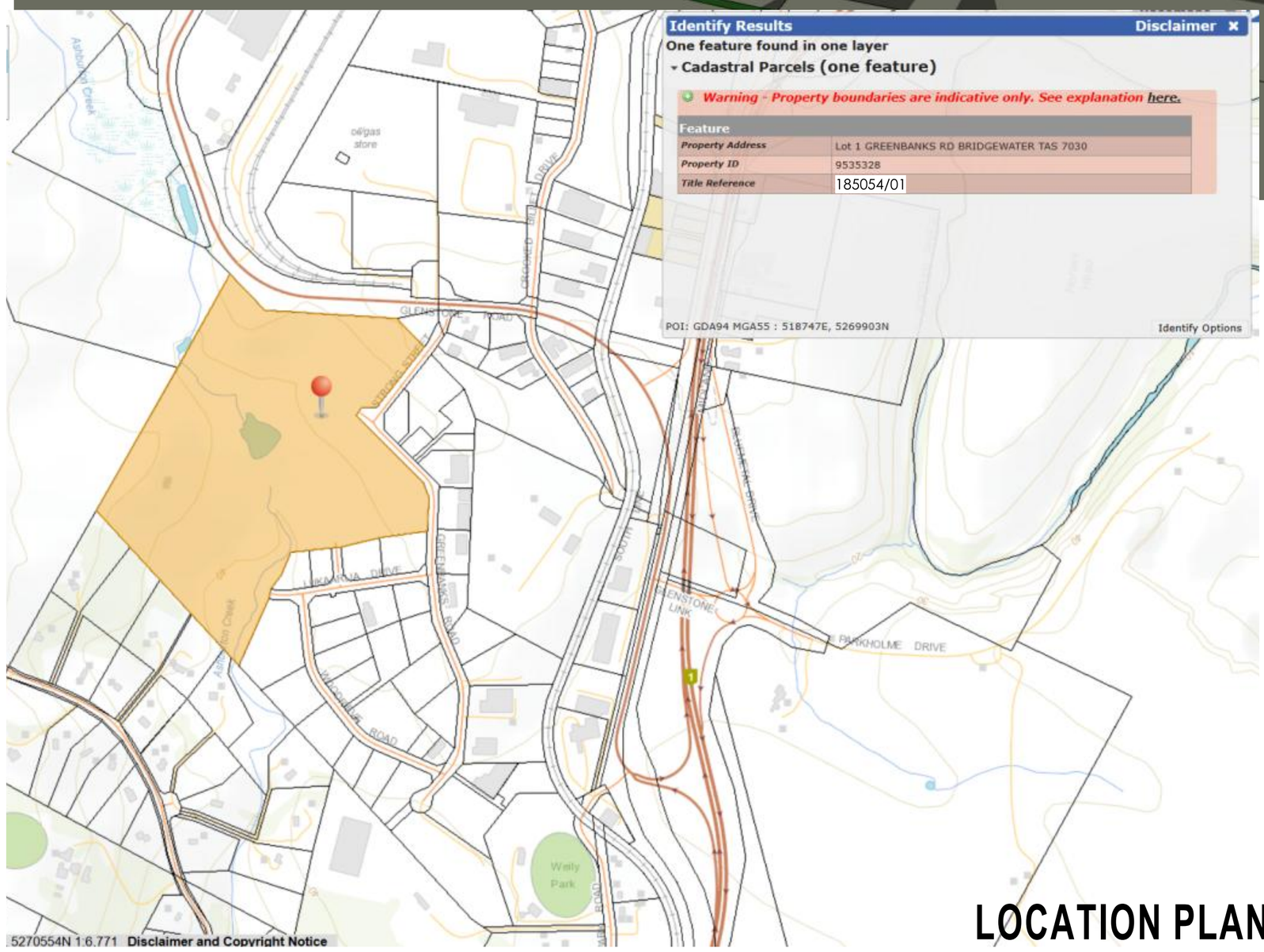


LOCATION PLAN

LOCATION PLAN

Landscaping to front boundary


MARCUSRALPH
Design architectural animation design
Building designer accreditation CC1317F
13 Franklin street
Richmond, Tasmania 7025
0409 975 825 mob
e: marcusralph@bigpond.com

© Copyright

**Workshop and Offices**
**PAUL SUTCLIFFE**
Lot 1 Greenbanks Road
**Brighton**

**Project Information**

| | |
|---|---|
| date 22/03/2023 | planning issue-**A01** |
| designed and drawn **M.Ralph** | revision-date **Design Drawing** |
| job no: 2023-948 | drawing no: **948-01** |

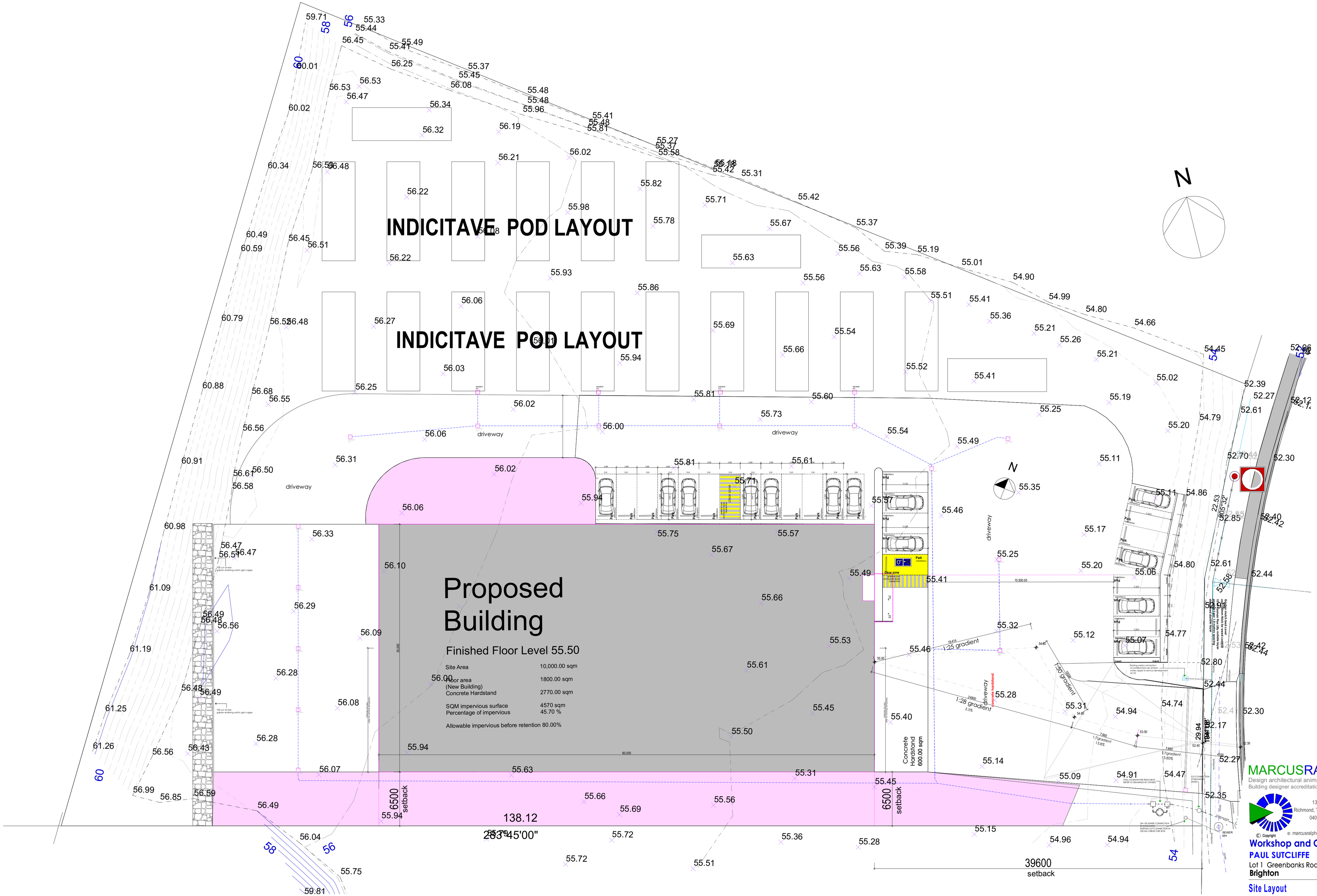


# Site Plan

scale 1:500

MARCUSRALPH
Design architectural animation design
Building designer accreditation CC1317F

13 Franklin street
Richmond, Tasmania 7025
0409 975 825 mob
e: marcusralph@bigpond.com

© Copyright

**Workshop and Offices**
**PAUL SUTCLIFFE**
Lot 1 Greenbanks Road
**Brighton**

**Site Layout**

| | |
|---|---|
| date 22/03/2023 | planning issue-**A01** |
| designed and drawn **M.Ralph** | revision-date **Design Drawing** |
| job no: 2023-948 | drawing no: **948-02** |

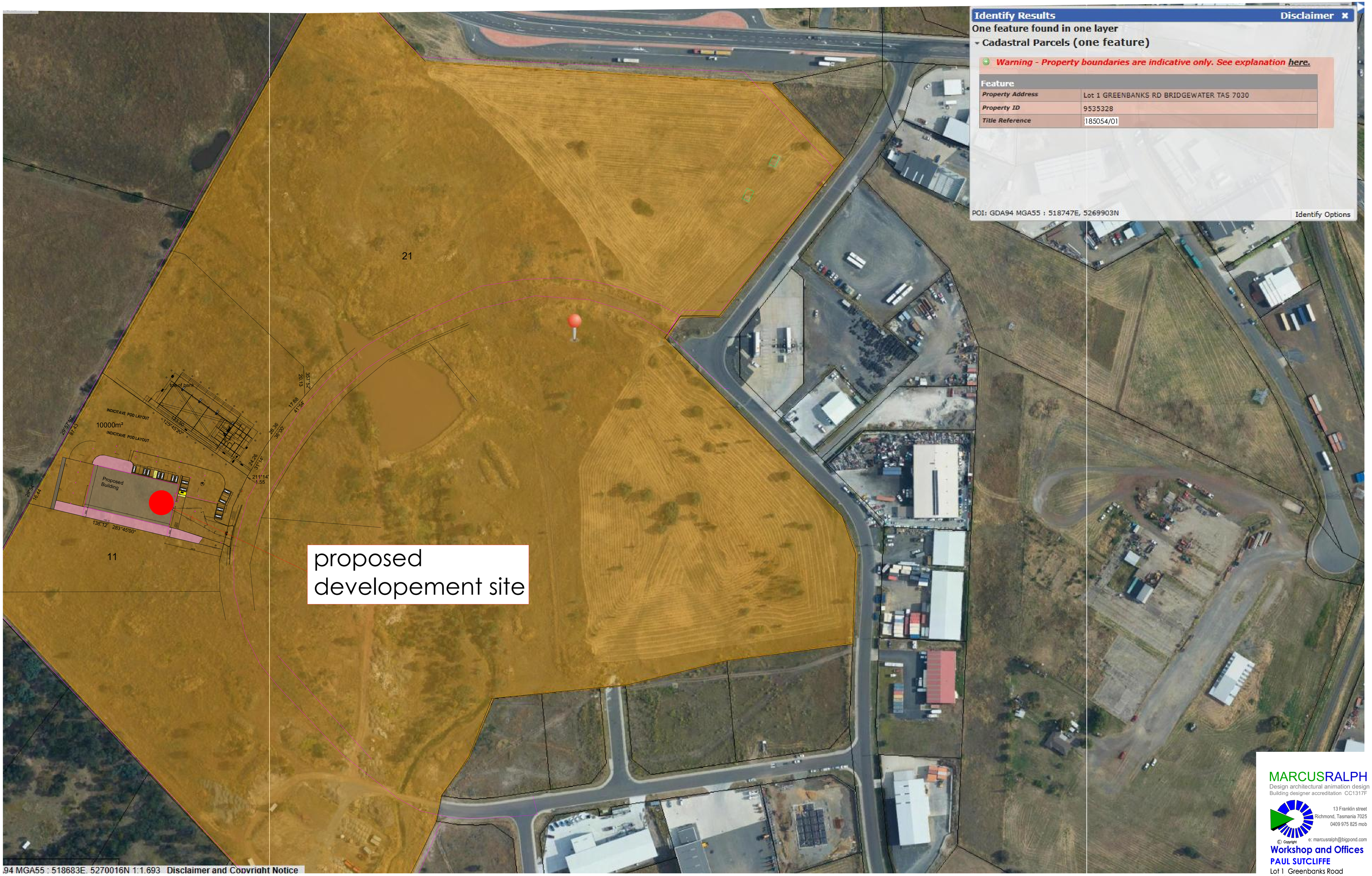


MARCUSRALPH
Design architectural animation design
Building designer accreditation CC1317F

13 Franklin street
Richmond, Tasmania 7025
0409 975 825 mob
e: marcusralph@bigpond.com

© Copyright

**Workshop and Offices**
**PAUL SUTCLIFFE**
Lot 1 Greenbanks Road
**Brighton**

**Sub-Division**

date
22/03/2023 planning issue - **A01**
designed and drawn revision-date
**M.Ralph** **Design Drawing**
job no: drawing no:
2023-948 **948-03**

# Location Plan

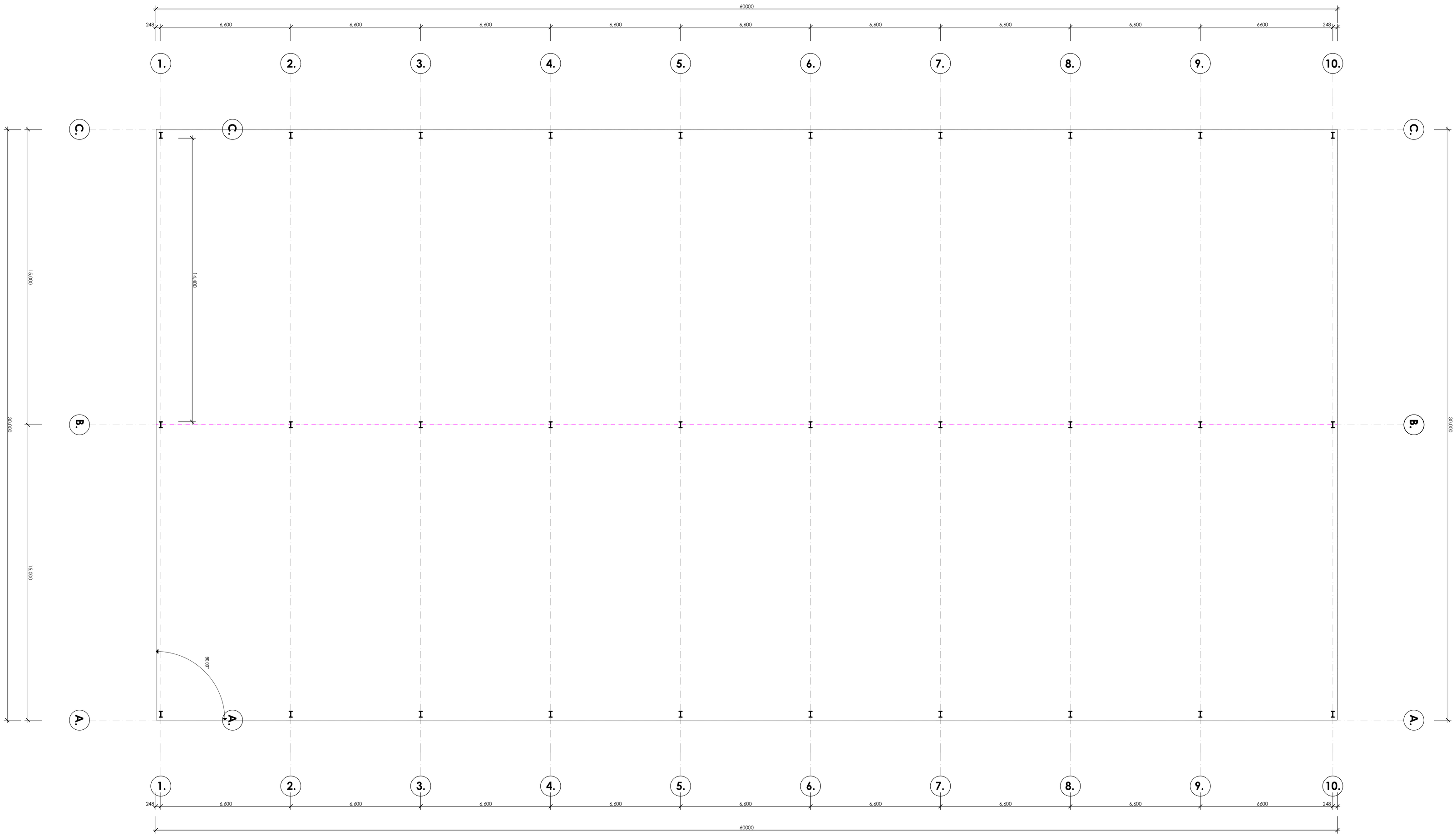


MARCUSRALPH
Design architectural animation design
Building designer accreditation CC1317F

13 Franklin street
Richmond, Tasmania 7025
0409 975 825 mob
e: marcusralph@bigpond.com

© Copyright

**Workshop and Offices**

**PAUL SUTCLIFFE**

Lot 1 Greenbanks Road
**Brighton**

**Dimensions**

| date | |
|---|---|
| 22/03/2023 | planning issue-**A01** |
| designed and drawn | revision-date |
| **M.Ralph** | **Design Drawing** |
| job no: | drawing no: |
| 2023-948 | **948-04** |

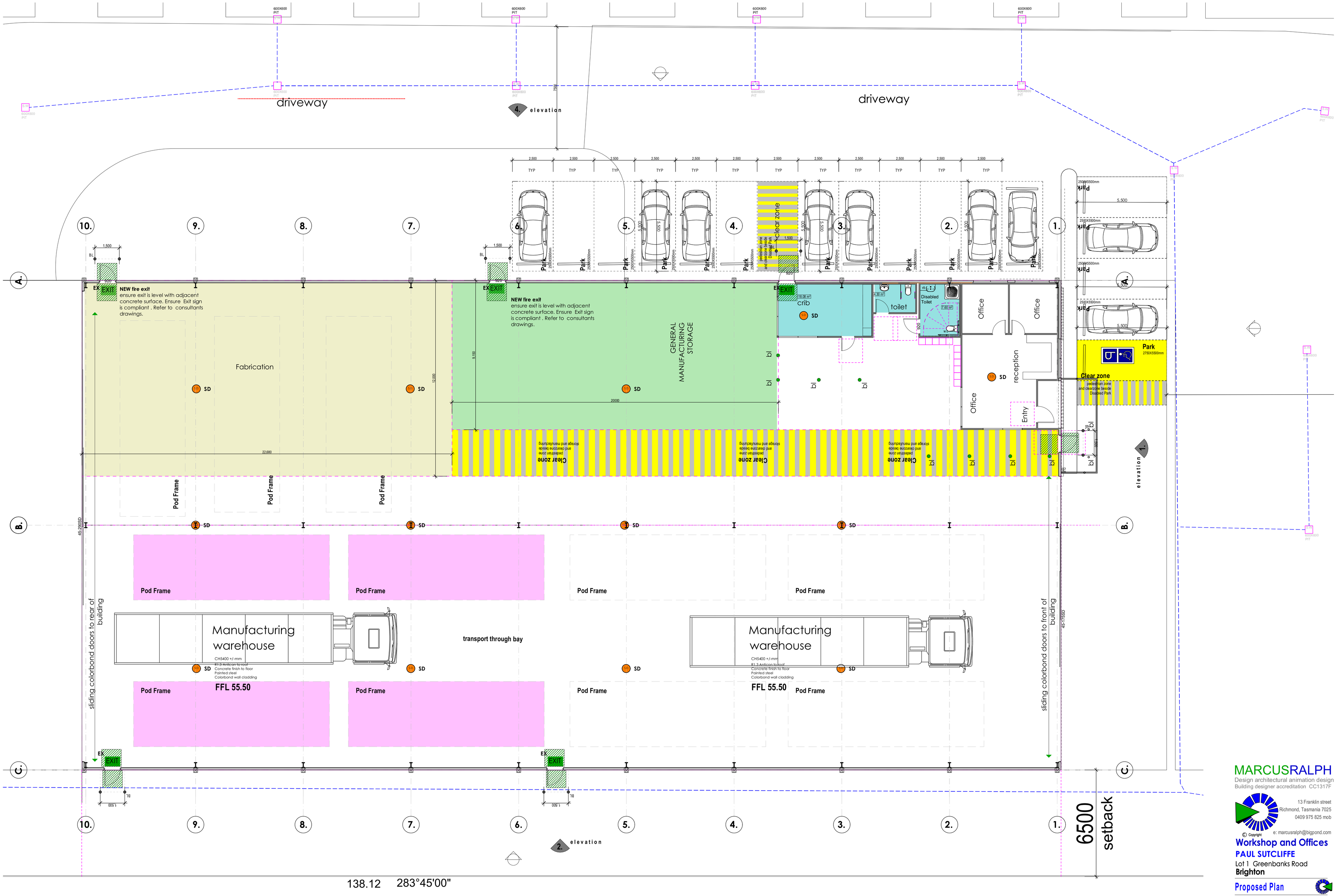


MARCUSRALPH
Design architectural animation design
Building designer accreditation CC1317F

13 Franklin street
Richmond, Tasmania 7025
0409 975 825 mob
e: marcusralph@bigpond.com

© Copyright

**Workshop and Offices**
**PAUL SUTCLIFFE**
Lot 1 Greenbanks Road
**Brighton**

**Proposed Plan**

| | |
|---|---|
| date | |
| 22/03/2023 | planning issue-**A01** |
| designed and drawn | revision-date |
| **M.Ralph** | **Design Drawing** |
| job no: | drawing no: |
| 2023-948 | **948-05** |

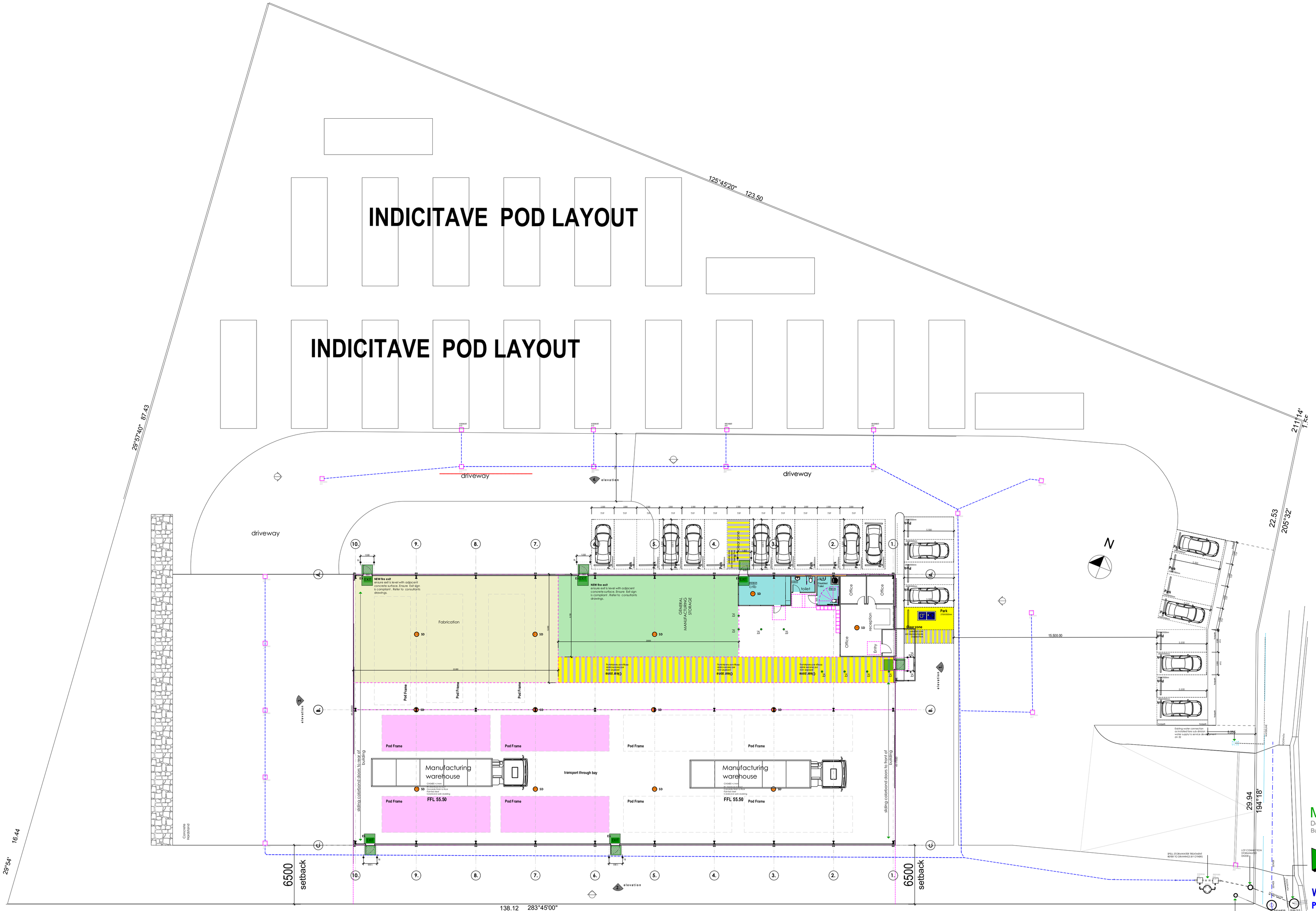


MARCUSRALPH
Design architectural animation design
Building designer accreditation CC1317F

13 Franklin street
Richmond, Tasmania 7025
0409 975 825 mob

© Copyright

**Workshop and Offices**
**PAUL SUTCLIFFE**
Lot 1 Greenbanks Road
**Brighton**

**Plan 1:200**

| | |
|---|---|
| date 22/03/2023 | planning issue-**A01** |
| designed and drawn **M.Ralph** | revision-date **Design Drawing** |
| job no: 2023-948 | drawing no: **948-06** |

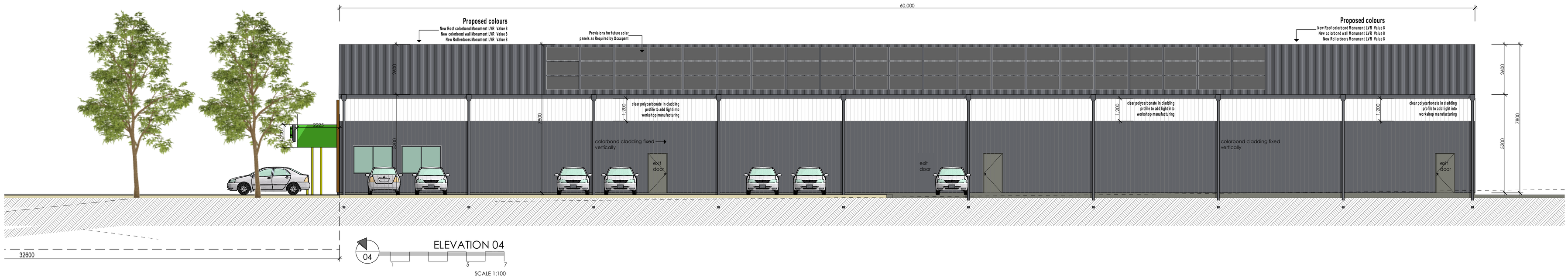


ELEVATION 04

SCALE 1:100

scale 1:100

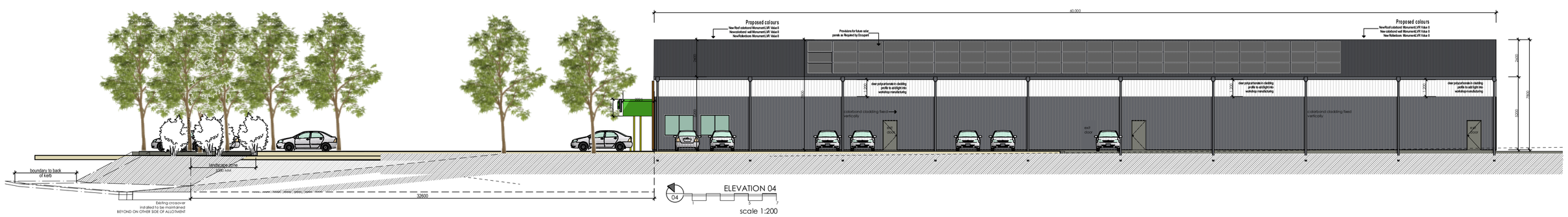


ELEVATION 04

scale 1:200

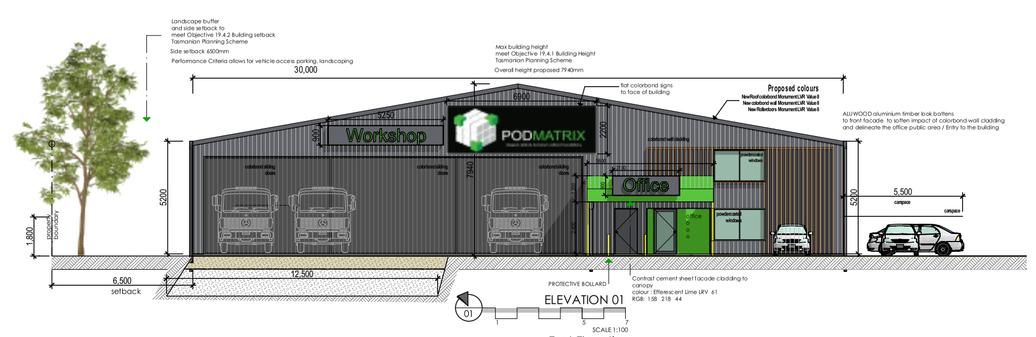


ELEVATION 01

SCALE 1:100

East Elevation

scale 1:200

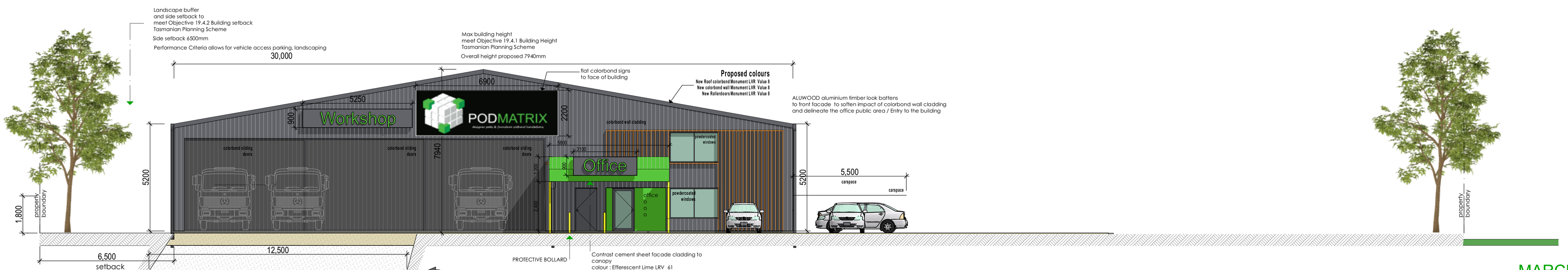


ELEVATION 01

SCALE 1:100

East Elevation


MARCUSRALPH
Design architectural animation design
Building designer accreditation CC1317F
13 Franklin street
Richmond, Tasmania 7025
0409 975 825 mob
e: marcusralph@bigpond.com


© Copyright

**Workshop and Offices**

**PAUL SUTCLIFFE**

Lot 1 Greenbanks Road
**Brighton**

**Elevations**

| | |
|---|---|
| date | |
| 22/03/2023 | planning issue-**A01** |
| designed and drawn | revision-date |
| **M.Ralph** | **Design Drawing** |
| job no: | drawing no: |
| 2023-948 | **948-07** |

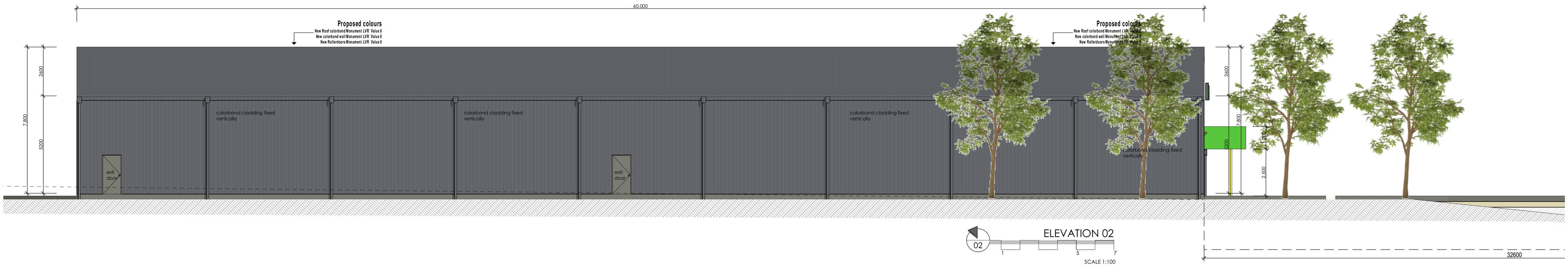


ELEVATION 02

SCALE 1:100

South Elevation

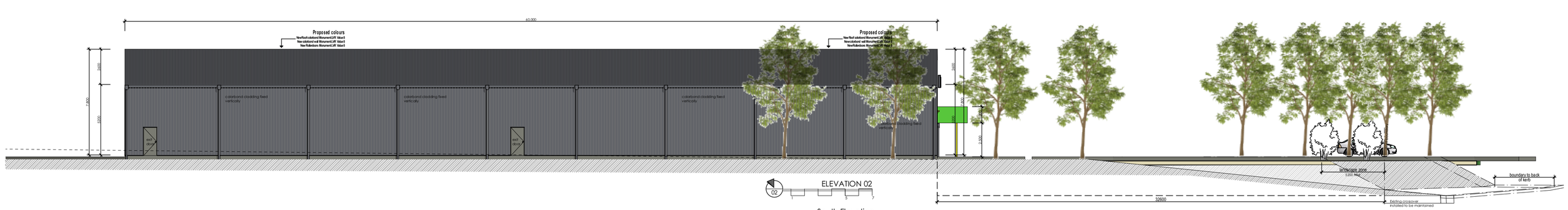


ELEVATION 02

South Elevation
scale 1:200

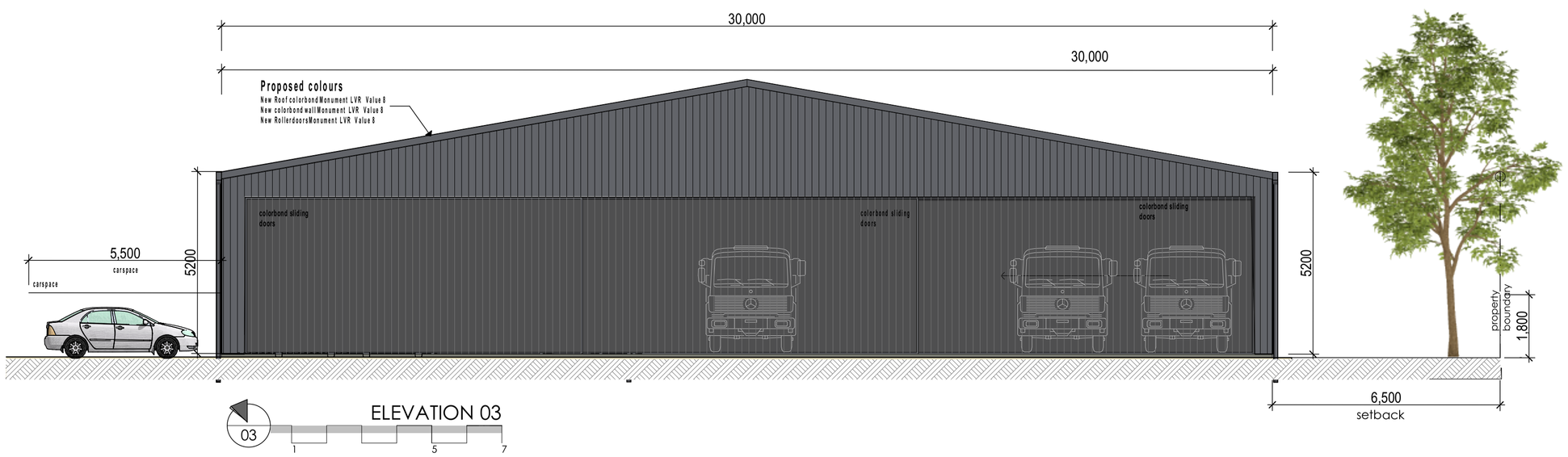


ELEVATION 03

SCALE 1:100

West Elevation

# ARTIST IMPRESSION


MARCUSRALPH
Design architectural animation design
Building designer accreditation CC1317F
13 Franklin street
Richmond, Tasmania 7025
0409 975 825 mob
e: marcusralph@bigpond.com


© Copyright

**Workshop and Offices**
**PAUL SUTCLIFFE**
Lot 1 Greenbanks Road
**Brighton**

**Elevations**

| | |
|---|---|
| date | |
| 22/03/2023 | planning issue-**A01** |
| designed and drawn | revision-date |
| **M.Ralph** | **Design Drawing** |
| job no: | drawing no: |
| 2023-948 | **948-08** |

ARTIST IMPRESSION

ARTIST IMPRESSION

ELEVATION 01

East Elevation

# Landscaping to front boundary


MARCUSRALPH
Design architectural animation design
Building designer accreditation CC1317F
13 Franklin street
Richmond, Tasmania 7025
0409 975 825 mob
e: marcusralph@bigpond.com


© Copyright

**Workshop and Offices**
**PAUL SUTCLIFFE**
Lot 1 Greenbanks Road
**Brighton**

**Generic Perspective**

| date | planning issue-A01 |
|---|---|
| 22/03/2023 | |
| designed and drawn | revision-date |
| M.Ralph | Design Drawing |
| job no: | drawing no: |
| 2023-948 | 948-09 |

INDICITAVE POD LAYOUT

INDICITAVE POD LAYOUT

driveway

driveway

driveway

driveway

N

# Proposed Building

Finished Floor Level 55.50

| | |
|---|---|
| Site Area | 10,000.00 sqm |
| Floor area (New Building) | 1800.00 sqm |
| Concrete Hardstand | 2770.00 sqm |
| SQM impervious surface | 4570 sqm |
| Percentage of impervious | 45.70 % |

Allowable impervious before retention 80.00%

300,000

60,000

6500 setback

138.12

283°45'00"

6500 setback

Concrete Hardstand 600.00 sqm

15,500.00

1:25 gradient

1:28 gradient 3.5%

1:30 gradient

driveway

concrete hardstand

1:7gradient 13.8%

1:7gradient 13.80%

39600 setback

22.53

205°32'

29.94

TBM TB


MARCUSRALPH
Design architectural animation design
Building designer accreditation CC1317F

13 Franklin street
Richmond, Tasmania 7025
0409 975 825 mob


© Copyright

e: marcusralph@bigpond.com

**Workshop and Offices**

**PAUL SUTCLIFFE**

Lot 1 Greenbanks Road
**Brighton**

**Driveway Layout**

| | |
|---|---|
| date | |
| 22/03/2023 | planning issue-**A01** |
| designed and drawn | revision-date |
| **M.Ralph** | **Design Drawing** |
| job no: | drawing no: |
| 2023-948 | **948-10** |

Proposed Building
Finished Floor Level 54.30

LAYDOWN AREA FOR CONSTRUCTED BUILDINGS ONCE COMPLETED
OR AS PART OF THE MANUFACTURING PROCESS LINE
150MM FCR COMPACTED AND ROLLED FLAT
TOP DRESSED WITH 50MM (20mm bluemetal clean) TO PROVIDE AND ALL WEATHER ACCESS
SURFACE FALL TOWARDS DRIVEWAY AND LANDSCAPED AREAS

RL

123.50
125°45'20"

29°57'40"
87.43

26.36
36°00'

52

driveway
concrete hardstand

crushed limestone
Garden beds for letterboxes
and sight lines for carpark for drainage against building
and garden bed access
various widths and shapes to define
native garden beds with gum mulch

N

## LANDSCAPING SCHEDULE

LISTED SPECIES MAY NOT ALL BE APPLICABLE

| COMMON NAME | SCIENTIFIC NAME | HEIGHT | WIDTH | NOTES |
|---|---|---|---|---|
| **TALL FEATURE TREES** | | | | |
| LEMON-SCENTED GUM | EUCALYPTUS CITRIODORA | 20m | 8m | FEATURE TREES PREDOMINANTLY FRONTING HIGHWAY |
| SPOTTED GUM | CORYMBIA MACULATA | 10m | 5m | |
| **SMALL TREES** | | | | |
| SHE OAK | ALLOCASUARINA VERTICILLATA | 5m | 3m | COPSE PLANTINGS ACROSS SITE |
| SOUTH ESK PINE | CALLITRIS OBLONGA | 4m | 2m | |
| **MEDIUM SHRUBS / BUSHES** | | | | |
| WHITE CORREA | CORREA ALBA | 1.5m | 1.5m | BORDERING SITE ENTRY / DRIVEWAY |
| SILVER BANKSIA | BANKSIA MARGINATA | 3m | 2m | SCREENING PLANTINGS AND AREAS OF VISUAL IMPROVEMENT |
| YELLOW BOTTLEBRUSH | CALLISTEMON PALLIDUS | 3m | 2m | |
| **NATIVE GRASSES** | | | | |
| TASMAN FLAX LILY | DIANELLA TASMANICA | 0.5m | 0.5m | BORDERING SITE ENTRY / DRIVEWAY |
| **GROUND COVERS** | | | | |
| BRONZE RAMBLER | GREVILLEA AUSTRALIS | 1m | 4m | ACROSS DESIGNATED LANDSCAPED AREAS AND EMBANKMENTS |
| INTEGRIFLORA | BANKSIA INTEGRIFLORA | 1m | 4m | |

## LANDSCAPING LEGEND:

### TREES

"BETULA ALBA"Silver birch advanced tree to a grown height of 12.0 METRES
Lemon Scented gum ëucalyptus Citriodora
Spotted Gum "Corymbia Maculata

NASHI 20 CENTURY
Pear Tree

LAWN AREA 100mm loam raked level and rolled compressed seeded with general fescue /rye seed.

Garden bed cultivated with dynamic lifter pelets topped with GUM MULCH 100MM THICK

Crushed rock garden bed with weed matting to a depth of 75mm.
20mm clean bluemetal

LOT 14
10000m²

Proposed Building
Finished Floor Level 55.50

| | |
|---|---|
| Site Area | 10,000.00 sqm |
| Floor area (New Building) | 1800.00 sqm |
| Concrete Hardstand | 2770.00 sqm |
| SQM impervious surface | 4570 sqm |
| Percentage of impervious | 45.70 % |

Allowable impervious before retention 80.00%

Concrete Hardstand 600.00 sqm
concrete hardstand

30.000

60.000

6500 setback

138.12

283°45'00"

29°54'
16.44

20MM BLUESTONE

and sight lines for carpark for drainage against building
and garden bed access
various widths and shapes to define
native garden beds with gum mulch

20MM BLUESTONE

and sight lines for carpark for drainage against building
and garden bed access
various widths and shapes to define
native garden beds with gum mulch

Park
Disabled Park
Gear zone

8000

1:25 gradient
1:28 gradient
1:50 gradient
1:7gradient 13.8%

Concrete Hardstand 600.00 sqm

39600
setback

205.32

29.94
194°18'

SERVICES FIRE PLUG

SEWER MANHOLE

stormwater manhole

54
53


MARCUSRALPH
Design architectural animation design
Building designer accreditation CC1317F
13 Franklin street
Richmond, Tasmania 7025
0409 975 825 mob
e: marcusralph@bigpond.com

© Copyright

**Workshop and Offices**
**PAUL SUTCLIFFE**
Lot 1 Greenbanks Road
**Brighton**

**Landscape Plan**

| | |
|---|---|
| date | |
| 22/03/2023 | planning issue - **A01** |
| designed and drawn | revision-date |
| **M.Ralph** | **Design Drawing** |
| job no: | drawing no: |
| 2023-948 | **948-11** |

# Turning template
# articulated Vehicle
# Entering the site turning - leaving through building

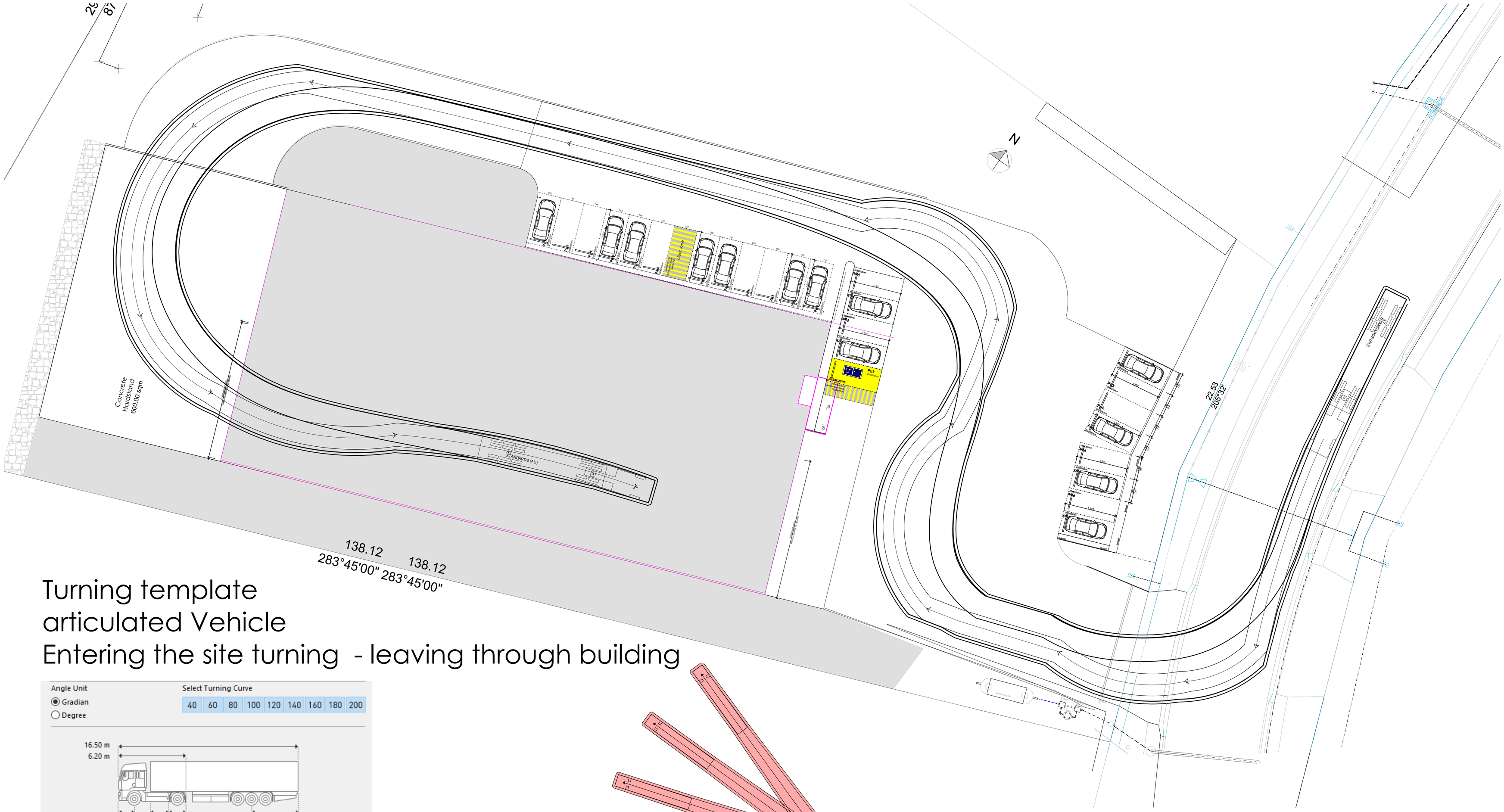


turning tempalte
scale 1:200

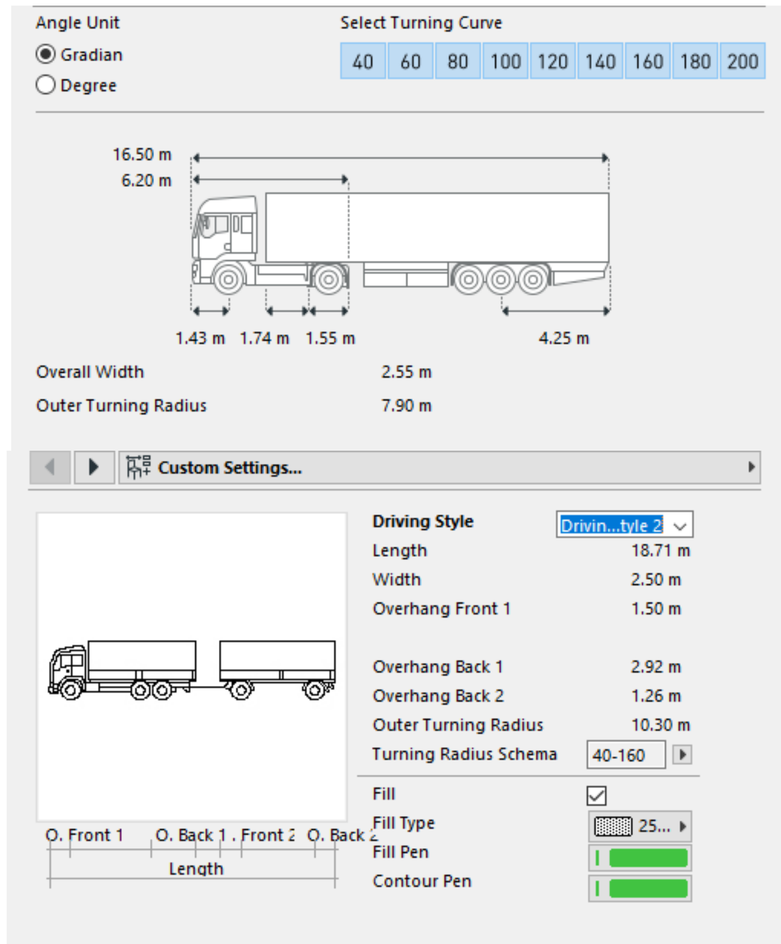


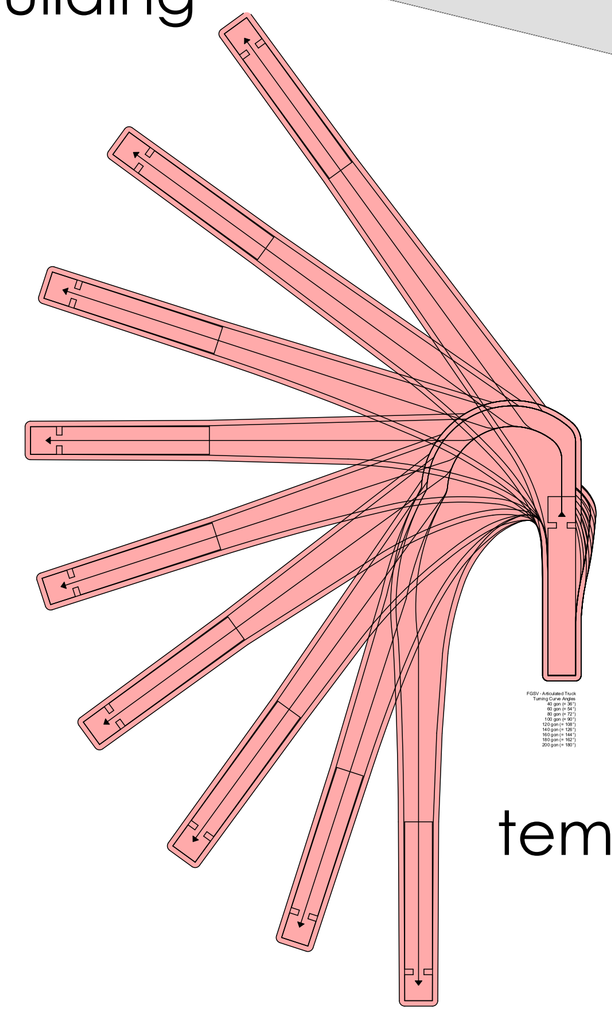

template not to scale


MARCUSRALPH
Design architectural animation design
Building designer accreditation CC1317F
13 Franklin street
Richmond, Tasmania 7025
0409 975 825 mob
e: marcusralph@bigpond.com

© Copyright

**Workshop and Offices**
**PAUL SUTCLIFFE**
Lot 1 Greenbanks Road
**Brighton**

**Turning Template**

| | |
|---|---|
| date 22/03/2023 | planning issue-**A01** |
| designed and drawn **M.Ralph** | revision-date **Design Drawing** |
| job no: 2023-948 | drawing no: **948-12** |

# Turning template articulated Vehicle Leaving site turning right




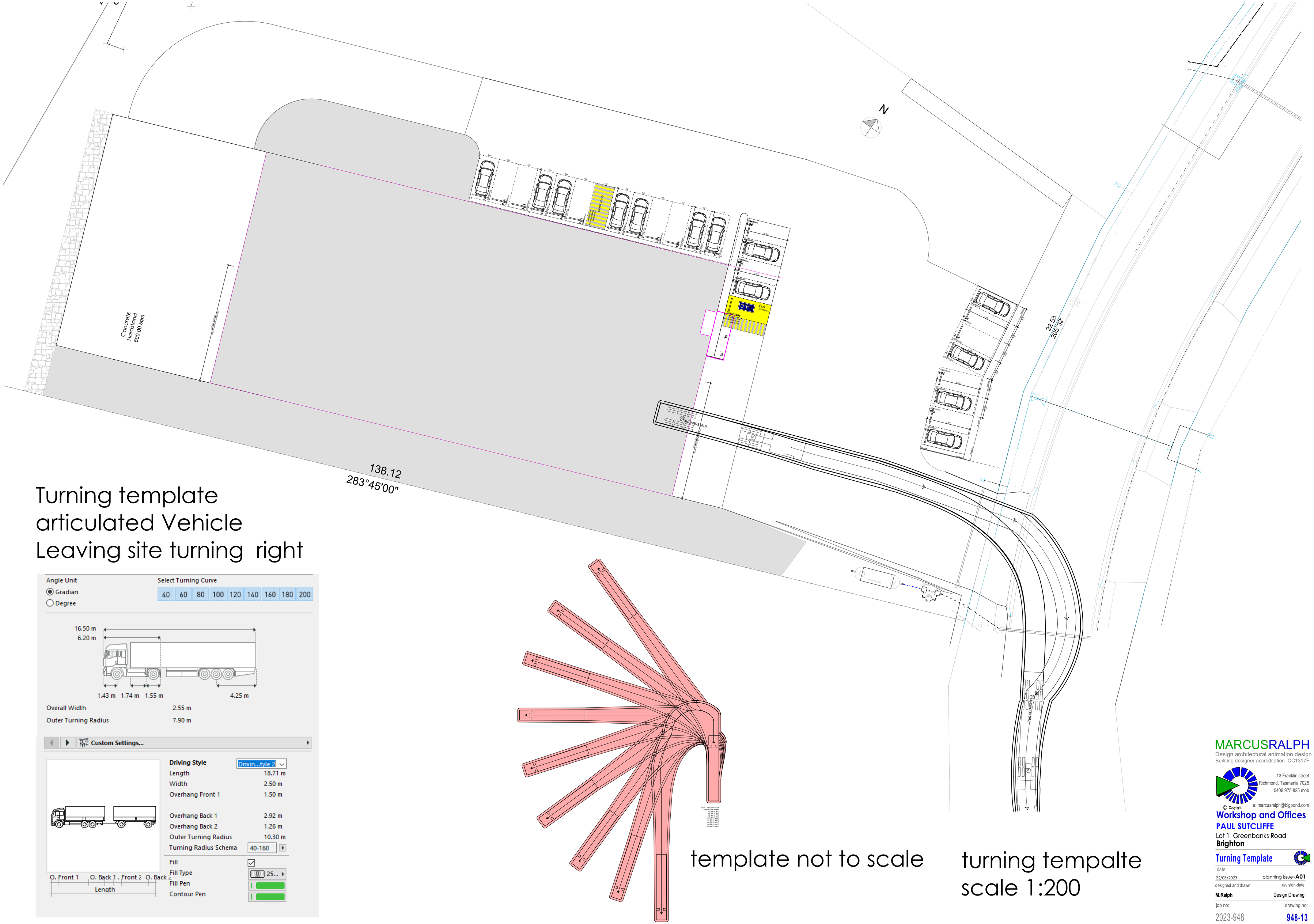


template not to scale

turning tempalte scale 1:200


MARCUSRALPH
Design architectural animation design
Building designer accreditation CC1317F
13 Franklin street
Richmond, Tasmania 7025
0409 975 825 mob
e: marcusralph@bigpond.com

© Copyright

**Workshop and Offices**
**PAUL SUTCLIFFE**
Lot 1 Greenbanks Road
**Brighton**

**Turning Template**

| | |
|---|---|
| date 22/03/2023 | planning issue-**A01** |
| designed and drawn **M.Ralph** | revision-date **Design Drawing** |
| job no: 2023-948 | drawing no: **948-13** |

# Turning template articulated Vehicle Leaving site turning Left

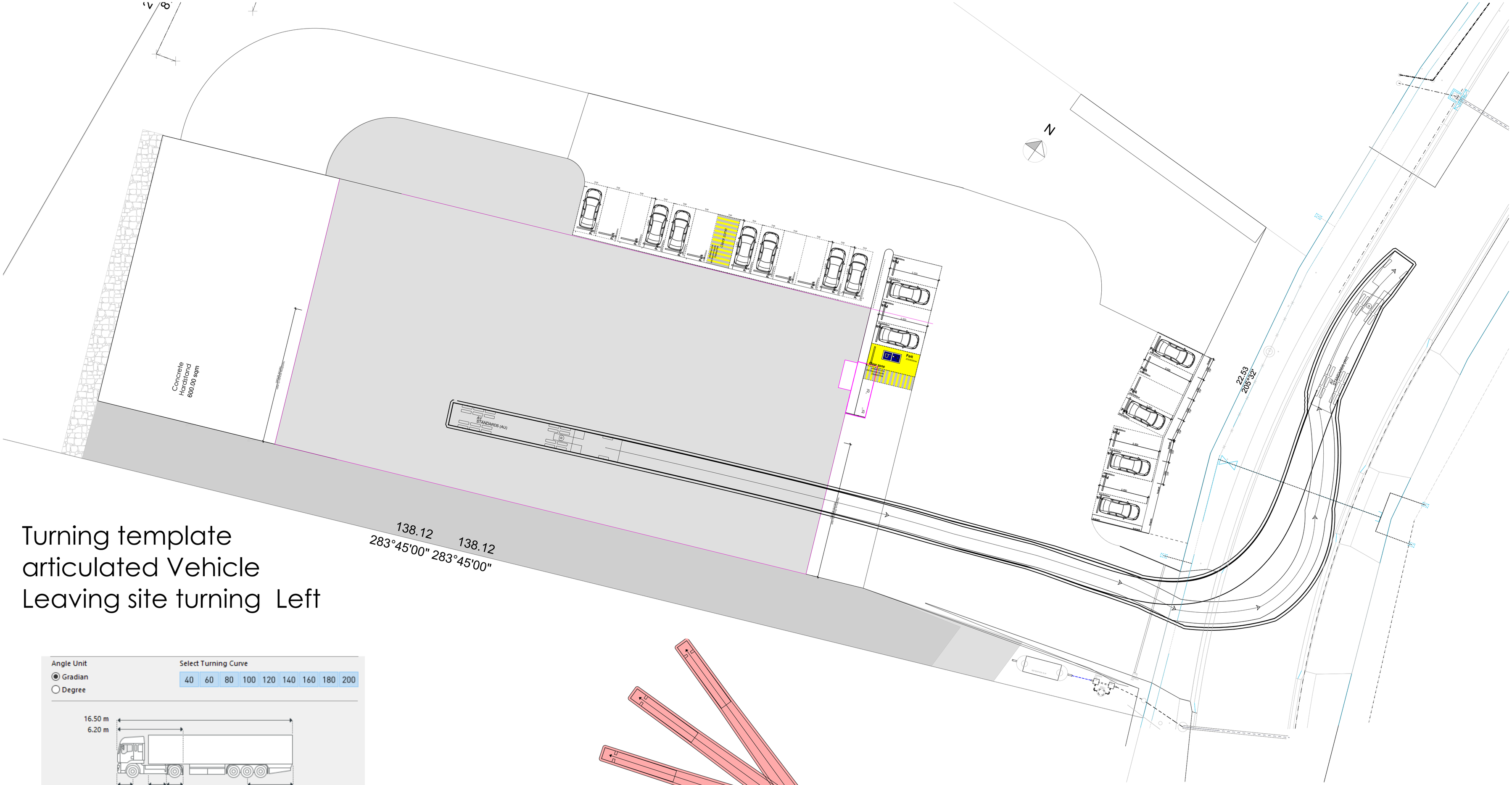


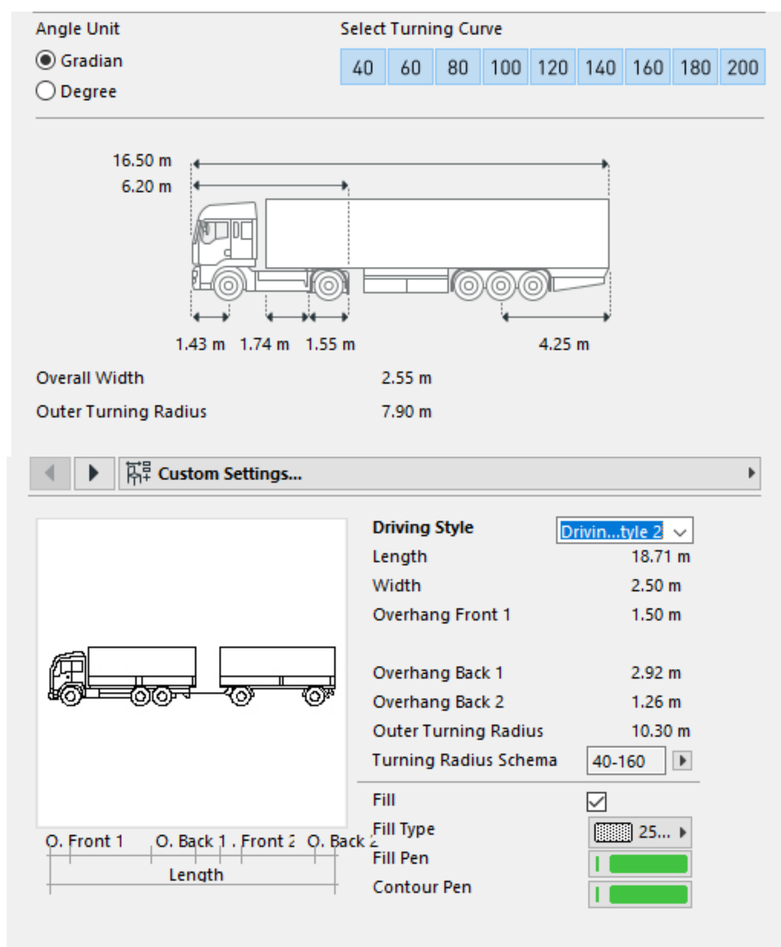


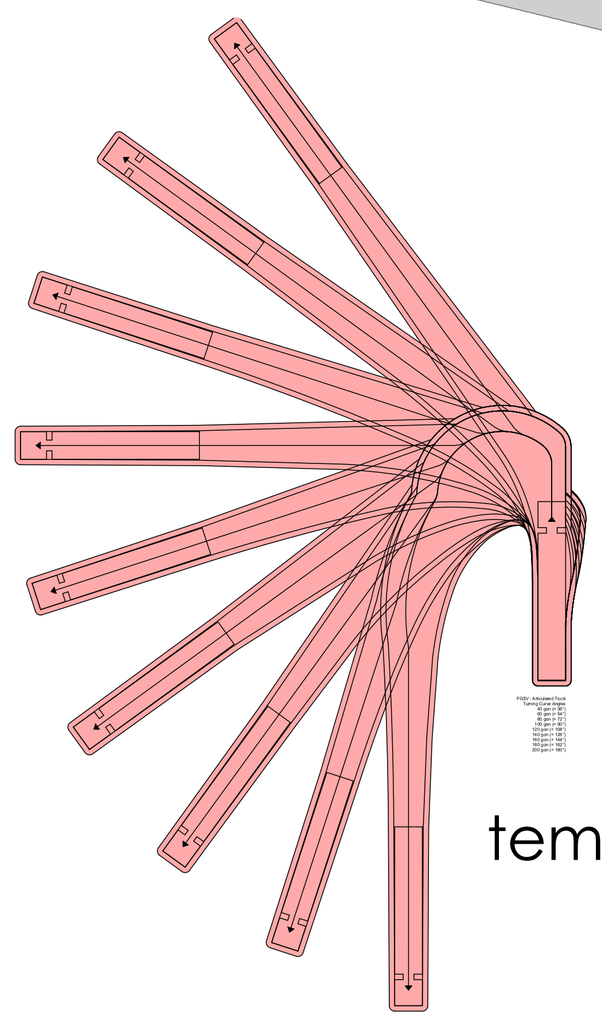

template not to scale

turning tempalte
scale 1:200


MARCUSRALPH
Design architectural animation design
Building designer accreditation CC1317F
13 Franklin street
Richmond, Tasmania 7025
0409 975 825 mob
e: marcusralph@bigpond.com

© Copyright

**Workshop and Offices**
**PAUL SUTCLIFFE**
Lot 1 Greenbanks Road
**Brighton**

Turning Template

| | |
|---|---|
| date 22/03/2023 | planning issue-**A01** |
| designed and drawn **M.Ralph** | revision-date **Design Drawing** |
| job no: 2023-948 | drawing no: **948-14** |

# Turning template
# articulated Vehicle
# Entering the site turning - leaving through building

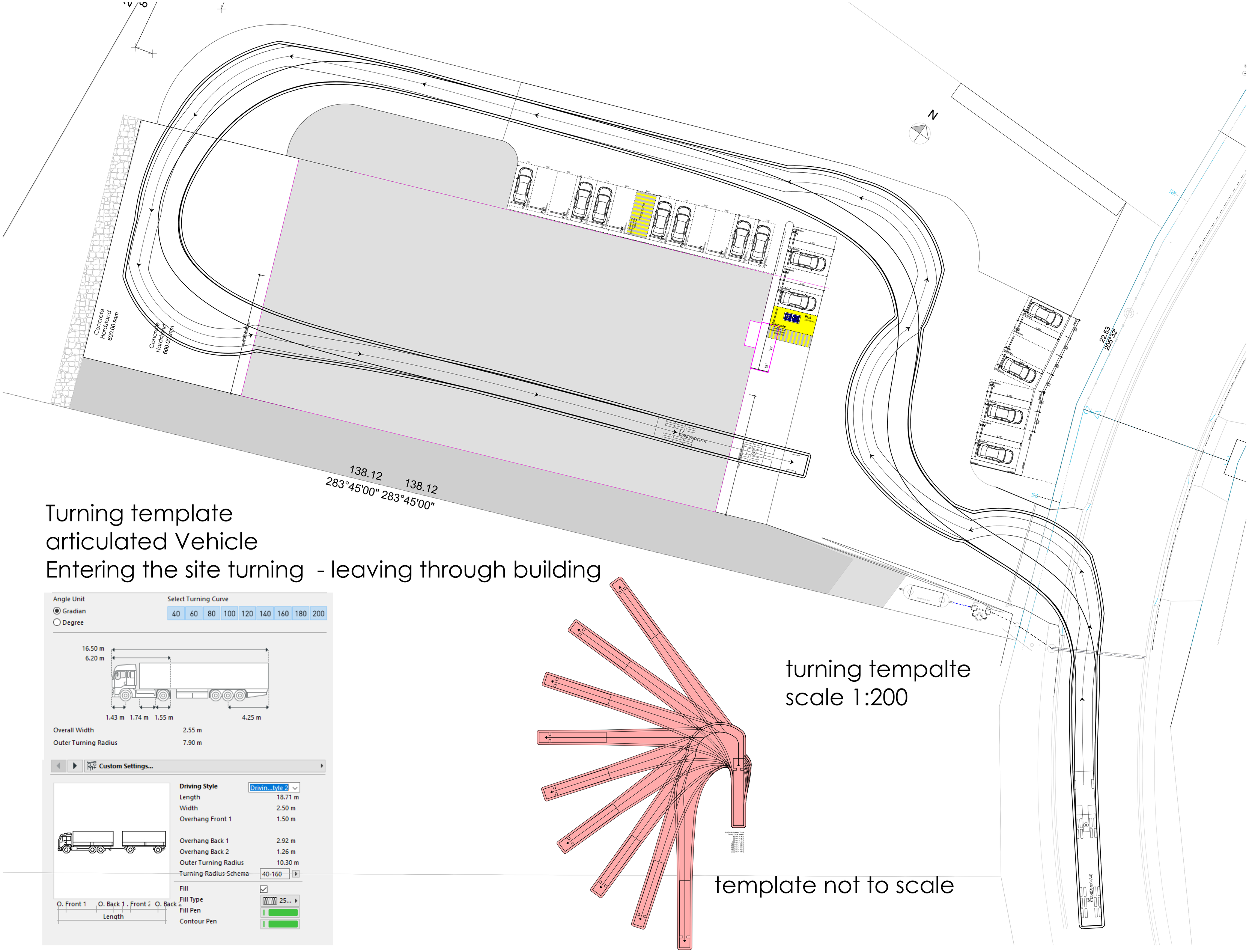






MARCUSRALPH
Design architectural animation design
Building designer accreditation CC1317F
13 Franklin street
Richmond, Tasmania 7025
0409 975 825 mob
e: marcusralph@bigpond.com

© Copyright

**Workshop and Offices**
**PAUL SUTCLIFFE**
Lot 1 Greenbanks Road
**Brighton**

**Turning Template**

| date | planning issue - **A01** |
|---|---|
| 22/03/2023 | |
| designed and drawn | revision-date |
| **M.Ralph** | **Design Drawing** |
| job no: | drawing no: |
| 2023-948 | **948-15** |

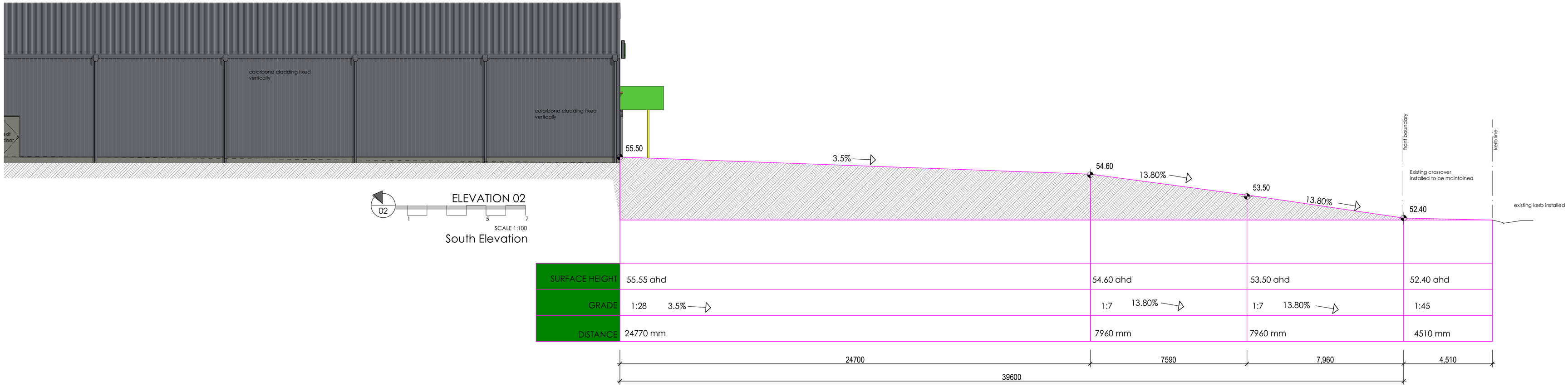


# Longitudinal Section through driveway

scale 1:100

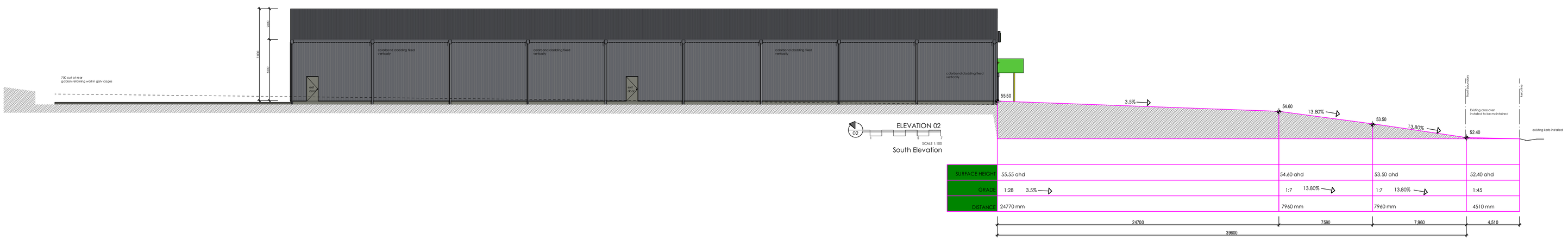


# Longitudinal Section through driveway

scale 1:200


MARCUSRALPH
Design architectural animation design
Building designer accreditation CC1317F
13 Franklin street
Richmond, Tasmania 7025
0409 975 825 mob
e: marcusralph@bigpond.com

© Copyright

**Workshop and Offices**
**PAUL SUTCLIFFE**
Lot 1 Greenbanks Road
**Brighton**

**Long Section**

| | |
|---|---|
| date | |
| 22/03/2023 | planning issue-**A01** |
| designed and drawn | revision-date |
| **M.Ralph** | **Design Drawing** |
| job no: | drawing no: |
| 2023-948 | **948-16** |

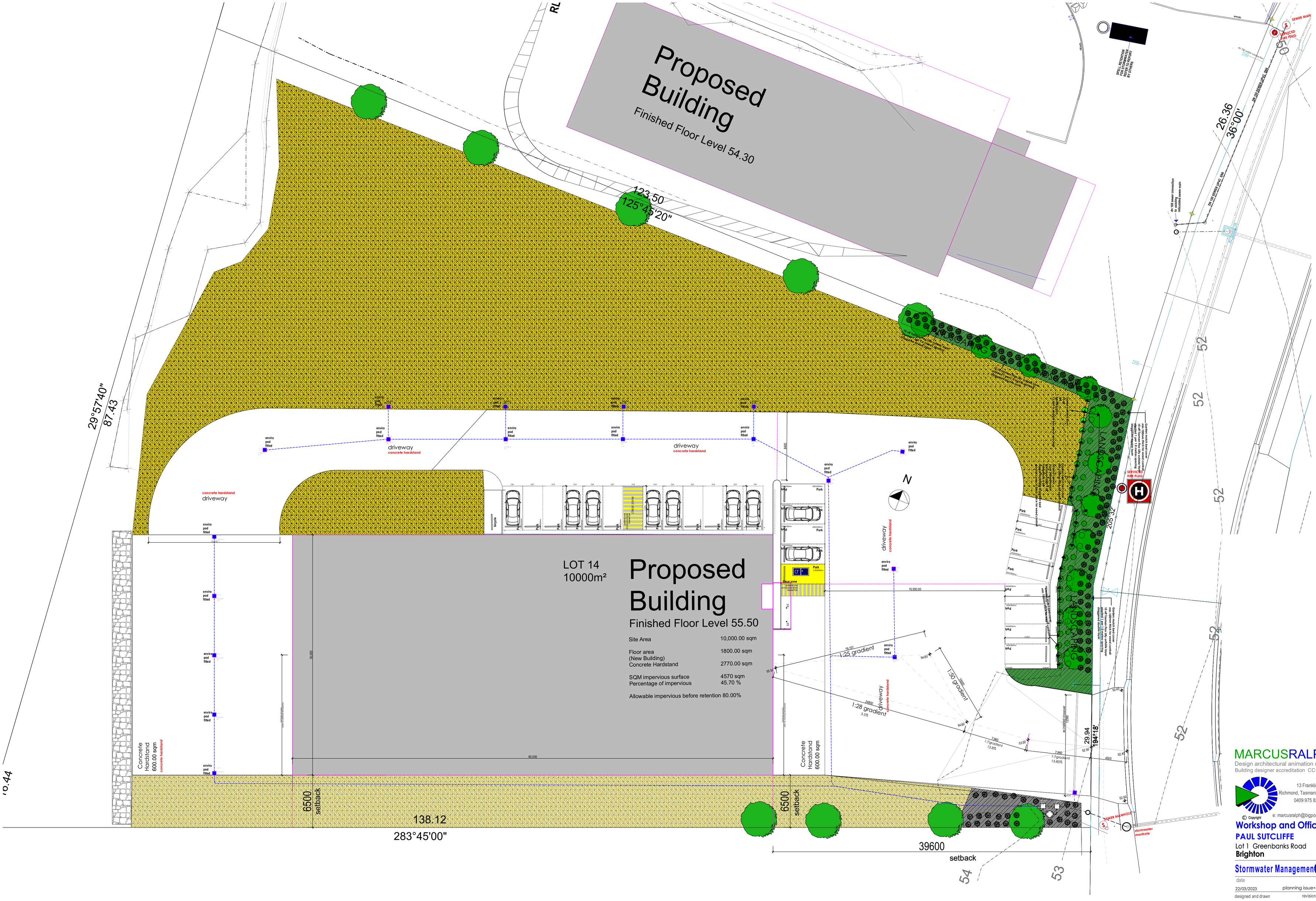


MARCUSRALPH
Design architectural animation design
Building designer accreditation CC1317F

13 Franklin street
Richmond, Tasmania 7025
0409 975 825 mob
e: marcusralph@bigpond.com

© Copyright

**Workshop and Offices**
**PAUL SUTCLIFFE**
Lot 1 Greenbanks Road
**Brighton**

**Stormwater Management**

| | |
|---|---|
| date 22/03/2023 | planning issue - **A01** |
| designed and drawn **M.Ralph** | revision-date **Design Drawing** |
| job no: 2023-948 | drawing no: **948-17** |

MARCUSRALPH
architectural animation design
13 Franklin street
Richmond, Tasmania 7025
62 602 220 ph
0409 975 525 mob
© Copyright
e: marcusralph@bigpond.com

28 October 2023
Planning Department
Brighton Council

Statutory planner

DA 2023 / 00168
CONSTRUCTION YARD, Lot 1
Greenbanks Road,

# Stormwater management plan

Design response:
This relates specifically to (future Lot 14) at Lot 1, Greenbanks Road, Bridgewater. The approved sub-division designed by PDA has used calculations and retention in place to allow for each allotment to be developed up to 80 % Impervious material.

The current proposal shown through the '**SPELL TRAIN** 'designed system shows calculations for impervious materials as follows.

**Calculations**

| | |
|---|---|
| Roofed area | 1800.00 sqm |
| Concrete hardstand front, side and rear | 3140.00 sqm |
| Bluestone gravel layoff area | 2500.00 sqm |

The total impervious area =4940.00 sqm
Site area proposed = 10,000.00 sqm
Impervious area = 49.40 %
Pervious area = 2500.00 sqm plus balance of lot

The previous area of 2500.00 sqm does have some ability in large rainfall events to direct runoff if gradients are larger than 5 %. As the site has been levelled to less than 1% (700mm fall in 80.00 metres) the surface water will move in a slow path (some degree of retention) directed to the stormwater pits used to collect surface water. It is intended to use this decorative gravel to look more appealing than blue fcr and use the limestone as a slow filter through our 'SPELL TRAIL 'calculations.
The stormwater pits are specified to contain enviro pods for filtration and will become part of the annual maintenance of the building as set forth by the building surveyor.
The band of landscaping which contains trees, shrubs and ground covers also is part of the designed system to prevent any silt or sediment from the site moving down the front of the lot onto the footpath.

Refer to **SPELL TRAIN** site plan, calculations and music modelling.
The site has been provided with a 300 dia stormwater connection which has capacity to Service the allotment and the surface water runoff in the '**SPELL TRAIN**" calculations

Kind regards
Marcus Ralph

ISSUE FOR APPROVAL
NOT FOR CONSTRUCTION

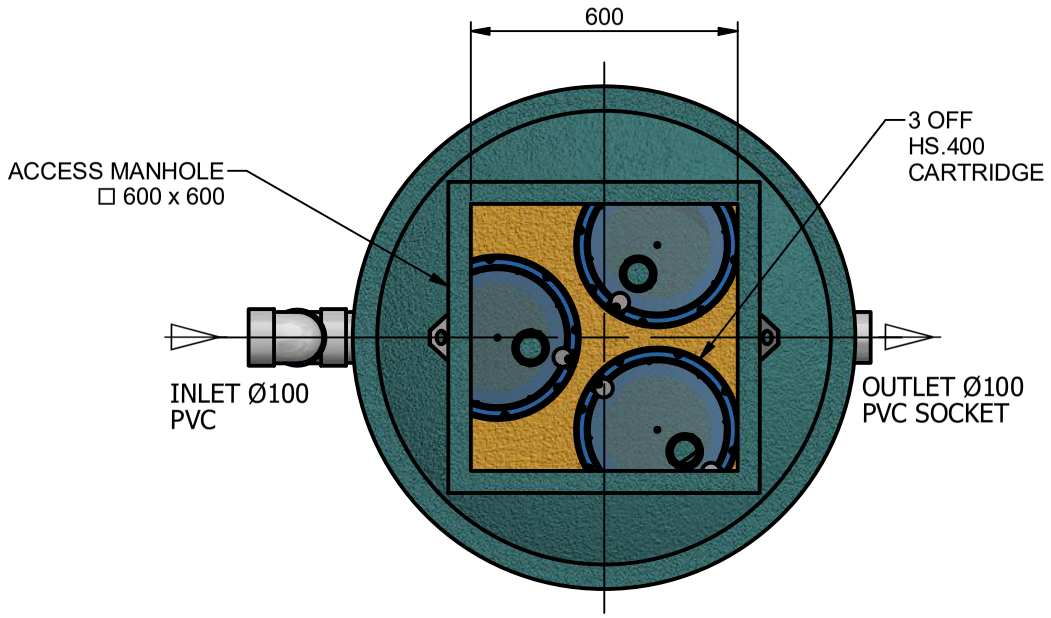


**PLAN VIEW**

| Site Level Confirmation | |
|---|---|
| Finished Surface Level (FSL) | RL: |
| Access Cover Thickness | mm |
| Inlet Invert Level | RL: |
| Outlet Invert Level | RL: |
| Company: | |
| Name: | |
| Date: | |

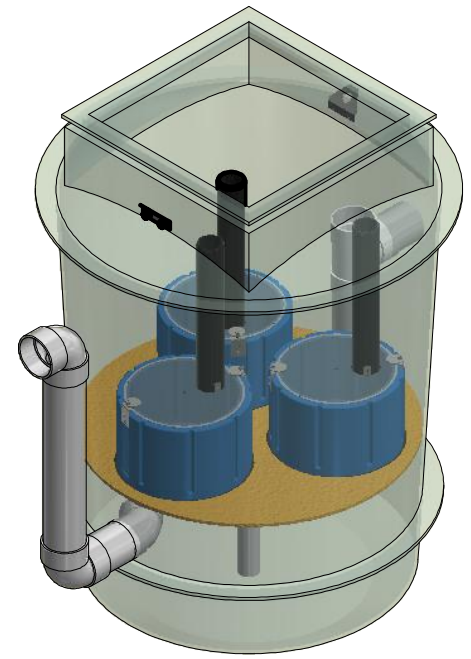

**ISOMETRIC VIEW**

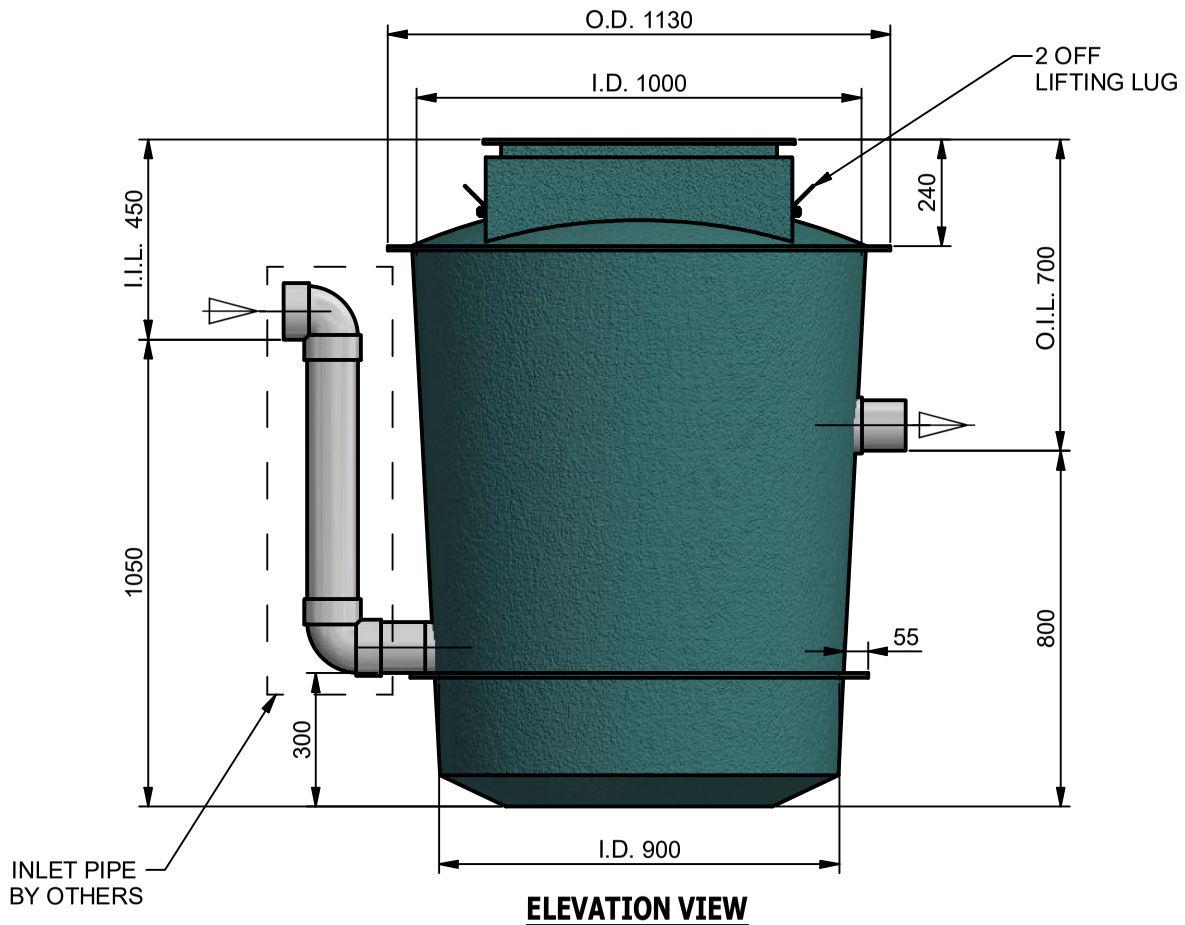


**ELEVATION VIEW**

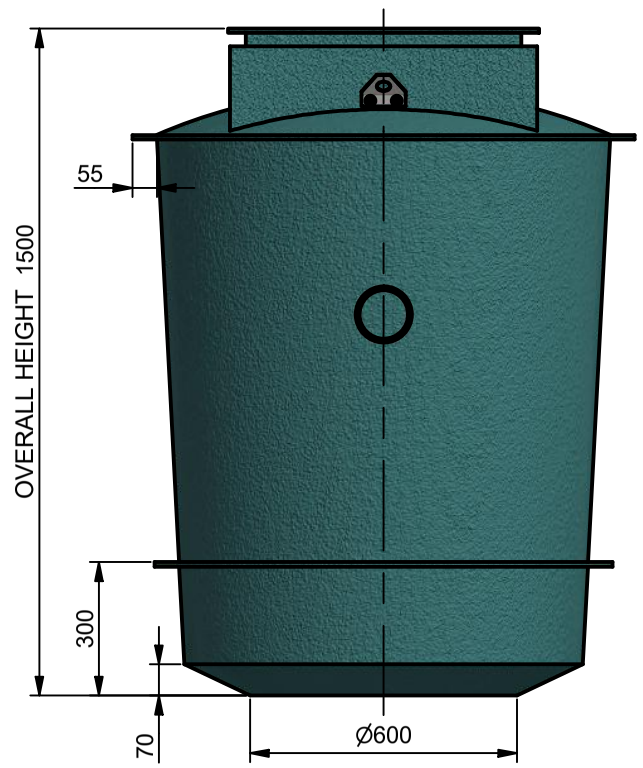


**SIDE VIEW**

NOTES:
1: THE COMBINED HEIGHT OF AN EXTENSION-RISER & LID EXCEEDING 1000mm WILL REQUIRE THE TANK TO BE OF HEAVY DUTY CONSTRUCTION

2: SYSTEM PIPEWORK MUST HAVE AT LEAST 250 MM OF FALL TO OPERATE CORRECTLY

3: DRY WEIGHT OF HYDROSYSTEM = 110 kg

**TOLERANCE:** All Dimensions to Closest 10 mm & +/- 30 mm

**ALL INTERCONNECTING PIPEWORK, PITS AND ASSOCIATED DRAINAGE BY OTHERS**

| REV | DATE | BY | DESCRIPTION | CHK |
|---|---|---|---|---|
| 1 | 17/09/2019 | P.Z. | INITIAL RELEASE | |

CLIENT:

CONFIDENTIAL - The drawings must not be disclosed to any third parties without written permission from SPEL STORMWATER . Unauthorised disclosure may result in prosecution.
© SPEL STORMWATER - This drawing is the property of SPEL STORMWATER ABN: 83 151 832 629 and is subject to return on demand. It is submitted for the use only in connection with the proposal and contracts of SPEL STORMWATER with the expressed conditions that it is not to be reproduced or copied in any form. This data must only be used in accordance with our standard terms and conditions.
© Copyright
SPEL STORMWATER accepts no responsibility for any loss or damage resulting from any person acting on this information.
The details and dimensions contained in this document may change, please check with SPEL STORMWATER for confirmation of current specifications.

| | |
|---|---|
| Drawn P.Z. | Date 17/09/2019 |
| Check | Date |
| Verified | Date |
| Approved | Date |
| Request No. | |

spelstormwater
joy in water
spel.com.au

PROJECT

TITLE
SPEL HYDROSYSTEM
SHS.400.H.03.100.PVC
GENERAL ARRANGEMENT

| SCALE | SIZE | SHEET | REV |
|---|---|---|---|
| N.T.S | A3 | 1 | 1 |

CUSTOMER CODE : DWG No. SP19-HY19290-S

F:\Vault Working Folder\Designs\SPEL\PRODUCTS\HYDROSYSTEM\400 SERIES\STANDARD\HS.400.HM FILTER ELEMENT\TAPERED TANKS\1460H TANK\3 HYDRO\SP19-HY19290-S.idw

ISSUE FOR APPROVAL
NOT FOR CONSTRUCTION

APPROVED..... ☐
NAME.....
SIGNED.....
DATE...../...../.....

| REVISION HISTORY | | | | |
|---|---|---|---|---|
| REV | DESCRIPTION | DESIGNER | CREATION DATE | CHECKED BY |
| 1 | INITIAL RELEASE | R.R. | 07/07/2020 | P.Z. |

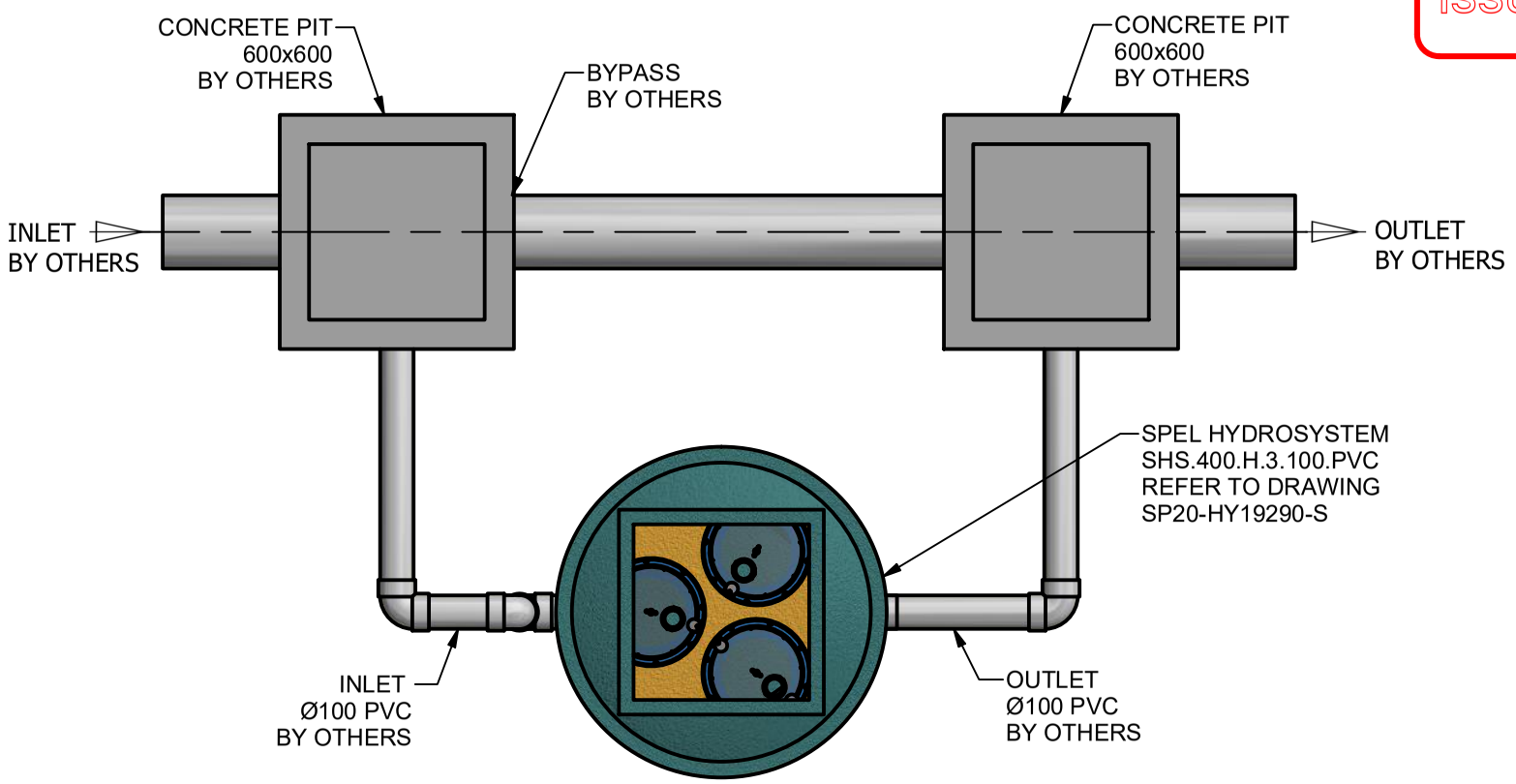


**PLAN VIEW**

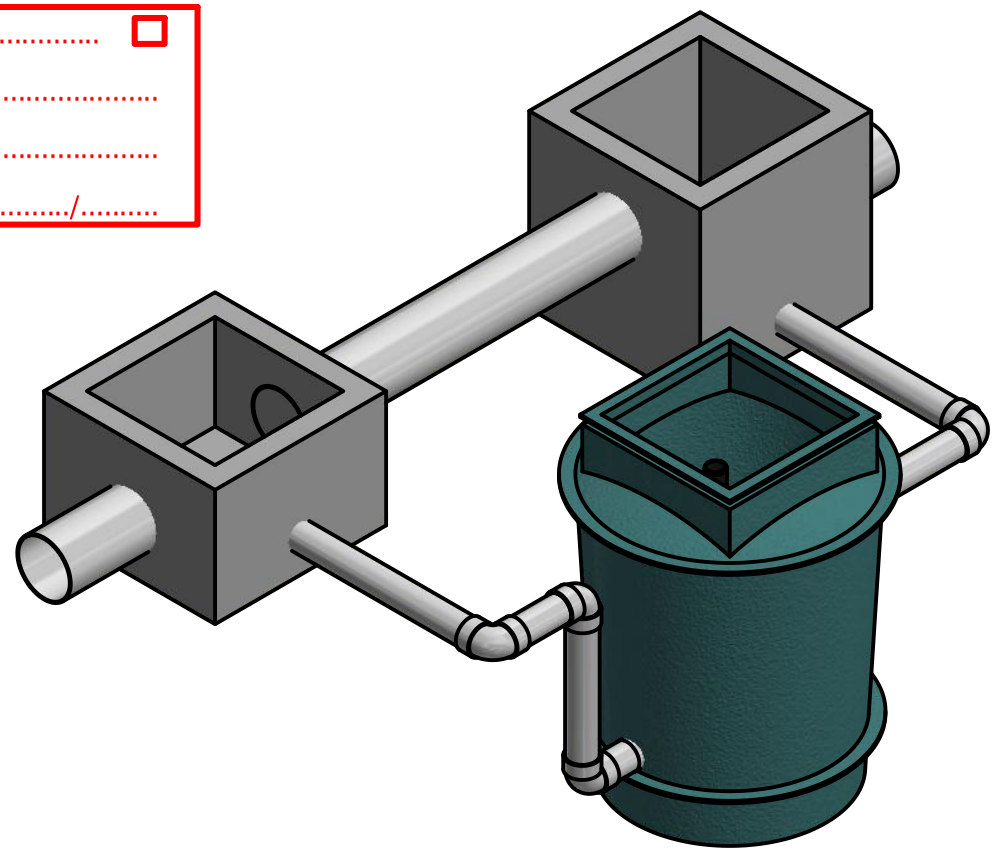

**ISOMETRIC VIEW**

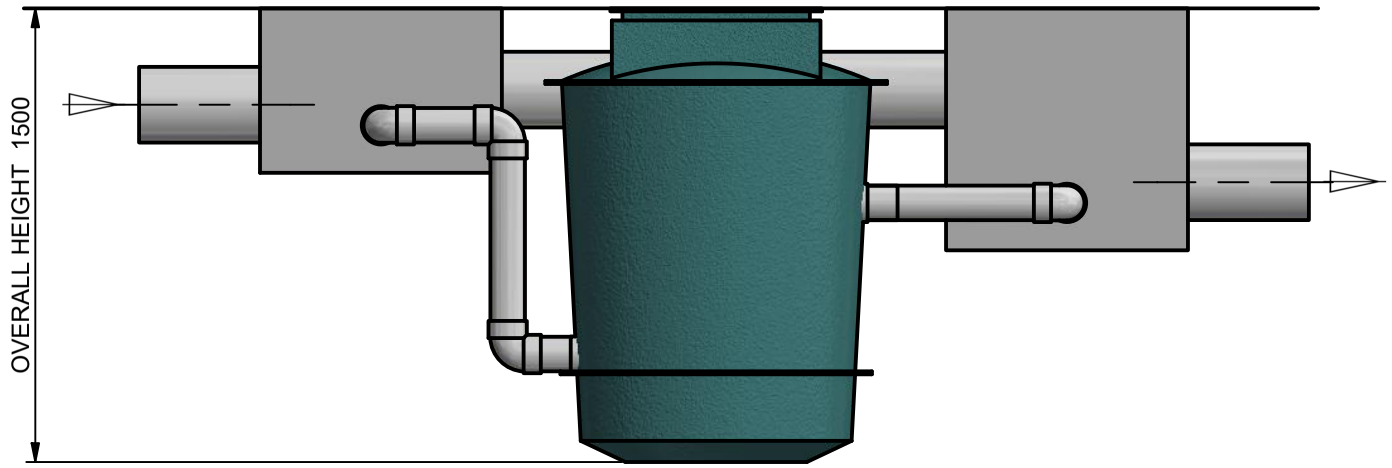


**ELEVATION VIEW**

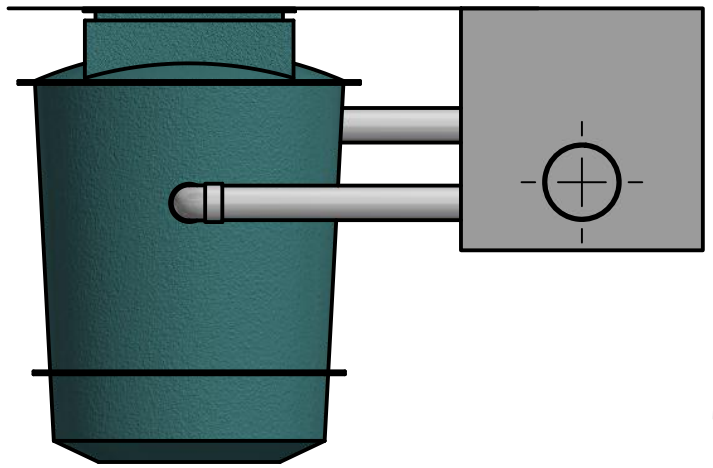

**SIDE VIEW**

| Site Level Confirmation | |
|---|---|
| Finished Surface Level (FSL) | RL: |
| Access Cover Thickness | mm |
| Inlet Invert Level | RL: |
| Outlet Invert Level | RL: |
| Company: | |
| Name: | |
| Date: | |

NOTES:
1: THE COMBINED HEIGHT OF AN EXTENSION-RISER & LID EXCEEDING 1000mm WILL REQUIRE THE TANK TO BE OF HEAVY DUTY CONSTRUCTION

2: SYSTEM PIPEWORK MUST HAVE AT LEAST 250 MM OF FALL TO OPERATE CORRECTLY

TOLERANCE: ALL DIMENSIONS TO CLOSEST 10mm +/- 30mm UNLESS OTHERWISE STATED.

CLIENT:

DISTRIBUTOR :

CONFIDENTIAL - The drawings must not be disclosed to any third parties without written permission from SPEL Environmental Sydney. Unauthorised disclosure may result in prosecution.
© SPEL Environmental - This drawing is the property of SPEL Environmental ABN: 83 151 832 629 and is subject to return on demand. It is submitted for the use only in connection with the proposal and contracts of SPEL Environmental with the expressed conditions that it is not to be reproduced or copied in any form. This data must only be used in accordance with our standard terms and conditions.
© Copyright
SPEL Environmental accepts no responsibility for any loss or damage resulting from any person acting on this information.
The details and dimensions contained in this document may change, please check with SPEL Environmental for confirmation of current specifications.

| | |
|---|---|
| Drawn R.R. | Date 07/07/2020 |
| Check P.Z. | Date 07/07/2020 |
| Verified | Date |
| Approved | Date |
| Request No. RN4499 | |

SPEL ENVIRONMENTAL
INTEGRATED WATER SOLUTIONS
100 Silverwater Road Silverwater NSW 2128
PH: 1300 773 500 | E: sales@spel.com.au
www.spel.com.au

PROJECT : SHS.400.H.03.100.PVC

TITLE SPEL HYDROSYSTEM WITH BYPASS
SHS.400.H.3.100.PVC
GENERAL ARRANGEMENT

| SCALE | SIZE | SHEET | REV |
|---|---|---|---|
| N.T.S | A3 | 1 | 1 |

CUSTOMER CODE :

DWG No. SP20-HY15310-S

C:\Users\robin\Documents\Vault\Designs\SPEL\PRODUCTS\HYDROSYSTEM\400 SERIES\STANDARD\HS.400.HM FILTER ELEMENT\TAPERED TANKS\1460H TANK\3 HYDRO\SP20-HY15310-S.idw

# LOT 1 GREENBANKS ROAD, BRIDGEWATER

ireneinc & smithstreetstudio
PLANNING & URBAN DESIGN

PLANNING TAS PTY LTD TRADING AS IRENEINC PLANNING & SMITH STREET STUDIO PLANNING & URBAN DESIGN ABN 78 114 905 074

# LOT 1 GREENBANKS ROAD, BRIDGEWATER

## Application for a Construction Yard (Manufacturing and Processing)

Last Updated – 25 January 2024

Author – Phil Gartrell

This report is subject to copyright the owner of which is Planning Tas Pty Ltd, trading as Ireneinc Planning and Smith Street Studio. All unauthorised copying or reproduction of this report or any part of it is forbidden by law and is subject to civil and criminal penalties as set out in the Copyright Act 1968. All requests for permission to reproduce this report or its contents must be directed to Irene Duckett.

**TASMANIA**
49 Tasma Street, North Hobart, TAS 7000
**Tel** (03) 6234 9281
**Fax** (03) 6231 4727
**Mob** 0418 346 283
**Email** planning@ireneinc.com.au

# CONTENTS


1. EXECUTIVE SUMMARY 4
1.1 SUBJECT SITE AND SURROUNDS 4
1.2 BACKGROUND 6
1.3 PROPOSAL 6
1.3.1 Permit Staging 7

2. PLANNING SCHEME REQUIREMENTS 8
2.1 GENERAL INDUSTRIAL ZONE 8
2.1.1 Zone Purpose Statements 8
2.1.2 Use Class 8
2.1.3 Development Standards For Buildings and Works 9
2.2 BRIGHTON INDUSTRIAL HUB SPECIFIC AREA PLAN 11
2.2.1 Use Standards 11
2.3 BRIDGEWATER QUARRY SPECIFIC AREA PLAN 12
2.3.1 Development within Bridgewater Quarry Specific Area Plan 12

3. CODES 13
3.1 PARKING AND SUSTAINABLE TRANSPORT CODE 13
3.1.1 Use Standards 13
3.1.2 Development Standards 15
3.2 ROAD AND RAILWAY ASSETS CODE 22
3.2.1 Use Standards 22
3.3 ELECTRICITY TRANSMISSION INFRASTRUCTURE PROTECTION CODE 23
3.4 ATTENUATION CODE 23
3.5 SIGNS CODE 23
3.5.1 Design and siting of signs 23

4. SUMMARY 27

# 1. EXECUTIVE SUMMARY

Ireneinc Planning have been engaged to prepare a planning report for a construction yard at 3 Bevel Close, Bridgewater (formerly Lot 1 Greenbanks Road).

## 1.1 SUBJECT SITE AND SURROUNDS

The site is illustrated in Figure 1 and has an area of approximately 20.59ha, with the following certificate of title.

- CT 185054/1.

The site is subject to an approved subdivision (SA 2020/50) which is currently being developed, however the final plan of survey is yet to be sealed. The following illustrates the current extent of the parent title, per the above title reference.

**Figure 1: The site – illustrating current extent of the parent title (source: www.thelist.tas.gov.au © State of Tasmania)**

Based on the approved lot layout, the proposed development would be sited on Lot 104.

However, pending the sealing of the plan of survey, the developer intends to lodge an application to amend the subdivision plan. The amendment seeks to divide Lot 104 in half to create Lots 14 and 15 – as illustrated below.

Whilst the proposed development has been designed and sited to ensure consistency with the final intended lot layout (Lot 14) - the application is made and considered with regard to the existing parent title, as previously agreed with Council.

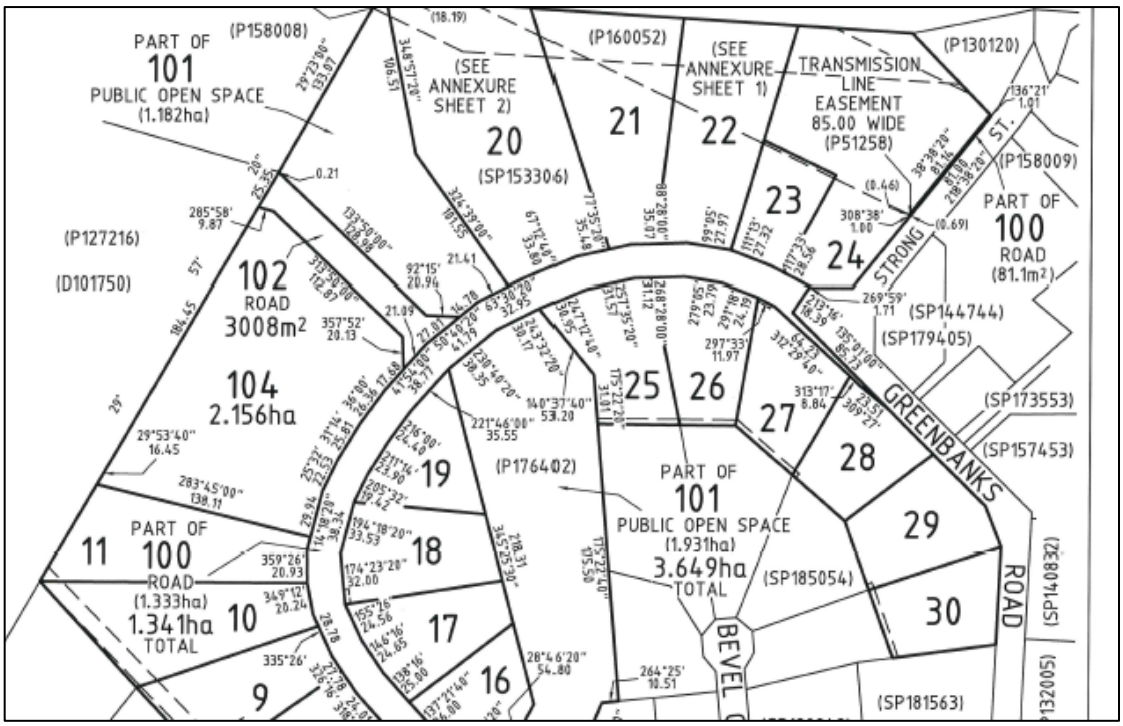


**Figure 2: Extract from approved subdivision, showing Lot 104.**

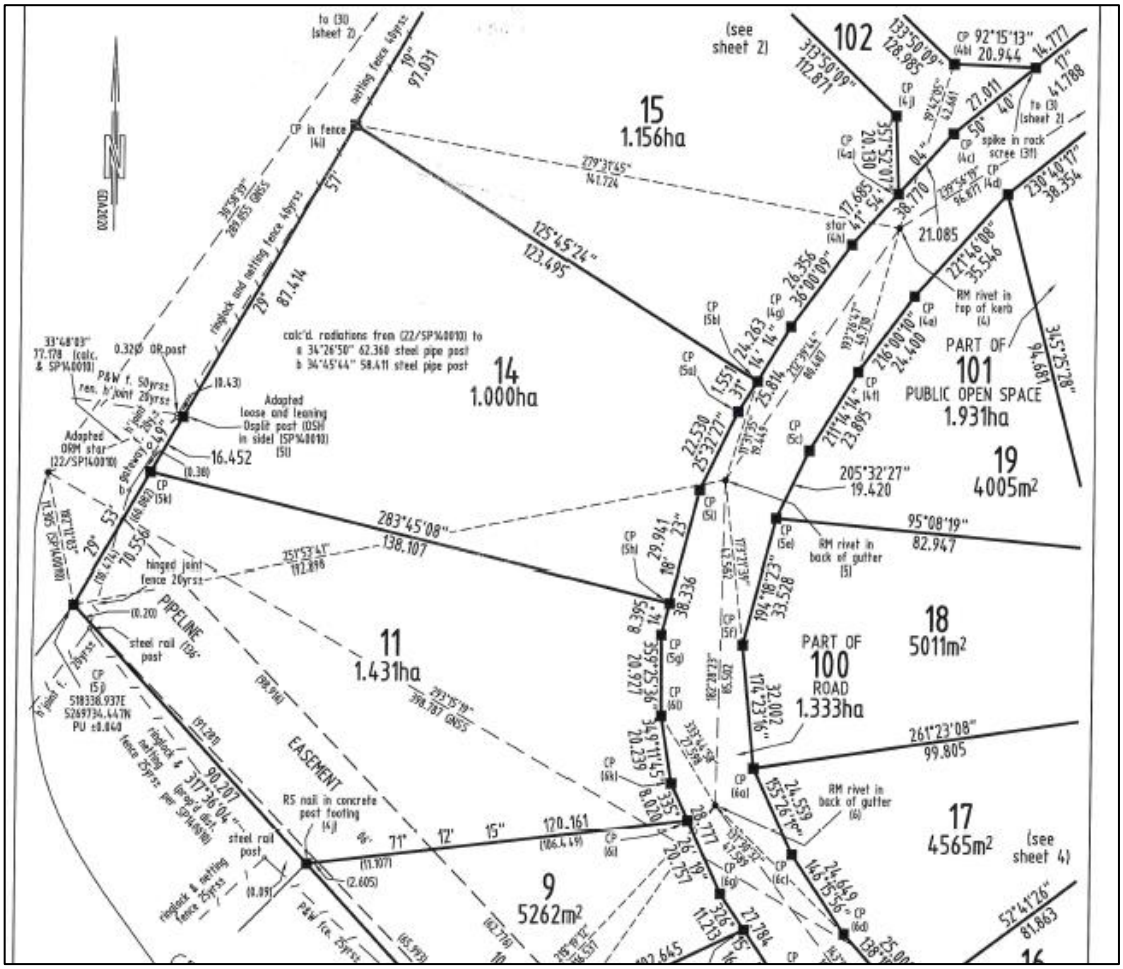


**Figure 3: Extract from proposed adjustment, showing Lot 104 divided to create Lots 14 and 15 (PDA Surveyors)**

## 1.2 BACKGROUND

A recent application was approved for a temporary contractor's yard at Lot 1 Greenbanks Road (parent title). Podmatrix have now been offered a new site (currently approved as Lot 104) on the sealed plan, to serve as a permanent site.

Once the sealed plans for the approved subdivision are issued, the owner intends to lodge an amendment to break Lot 104 into Lots 14 and 15. The approved development (DA 2022/142) will be located on Lot 15 and the proposed development will be located on Lot 14.

## 1.3 PROPOSAL

The proposal is for a warehouse and associated parking/assembly areas, which will be used to construct transportable homes, including those under contract for the State Government. Once assembled, the homes are transported off-site for 'installation'.

Council have advised the proposal falls under the manufacturing and processing use classification.

The site will employ/support approximately fifteen (15) full time employees, depending on the amount of on-site works, along with up to ten (10) subcontractors. Hours of operation will generally be Monday to Friday 7:30am to 4.00pm – however, if overtime is required to meet the contracts, these hours would increase to 6.00pm Monday to Friday.

Work may be required on Saturdays from 7:30am to 4:00pm.

The proposal includes a 1,800m$^2$ warehouse building, where the primary assembly of the pods will occur, along with the storage of materials. The warehouse will have a maximum height of approximately 7.8m, along with external impervious concrete hardstand areas comprising approximately 2,770m$^2$. Substantial landscaping is proposed along the frontage and southern side boundary. A total of 24 on-site parking spaces are proposed, along with internal space within the warehouse for larger commercial vehicles.

The type of materials stored on-site will include:

- Timber floor + roof trusses, timber wall frames;
- Modwood decking & cement sheet cladding;
- Colourbond roofing, flashings and PVC plumbing pipe.

Delivery of materials to site are mostly on flat bed trucks.

Day to day operations on the site would include construction of the pods by Podmatrix employees and subcontractors (Painter, electrician, plumber, plaster, roofer ect). Pods on site will be varied from bare chassis ready for floor trusses through to fully complete pods.

Construction/assembly will primarily occur within the warehouse, however during high demand periods the gravel area to the north may be used to store completed pods and/or, undertake minor fit outs prior to collection and delivery off-site.

When completed pods are ready for off-site installation, there will be semi-trailer trucks on site, and on odd occasions a franna or crane when required to load certain pods.

Staff and contractors accessing the site will utilise the designated parking spaces, but may on limited occasions park on the gravel area to the north in instances where minor fit out of pods is required, enabling flexibility and easy access to tools etc.

The surface finish of the gravel area will be compacted 20mm FCR. Based on previous experience operating on 20mm FCR, the operator has confirmed that gravel of this diameter does not transport easily via truck/vehicle tyres and is appropriate for the intended operations.

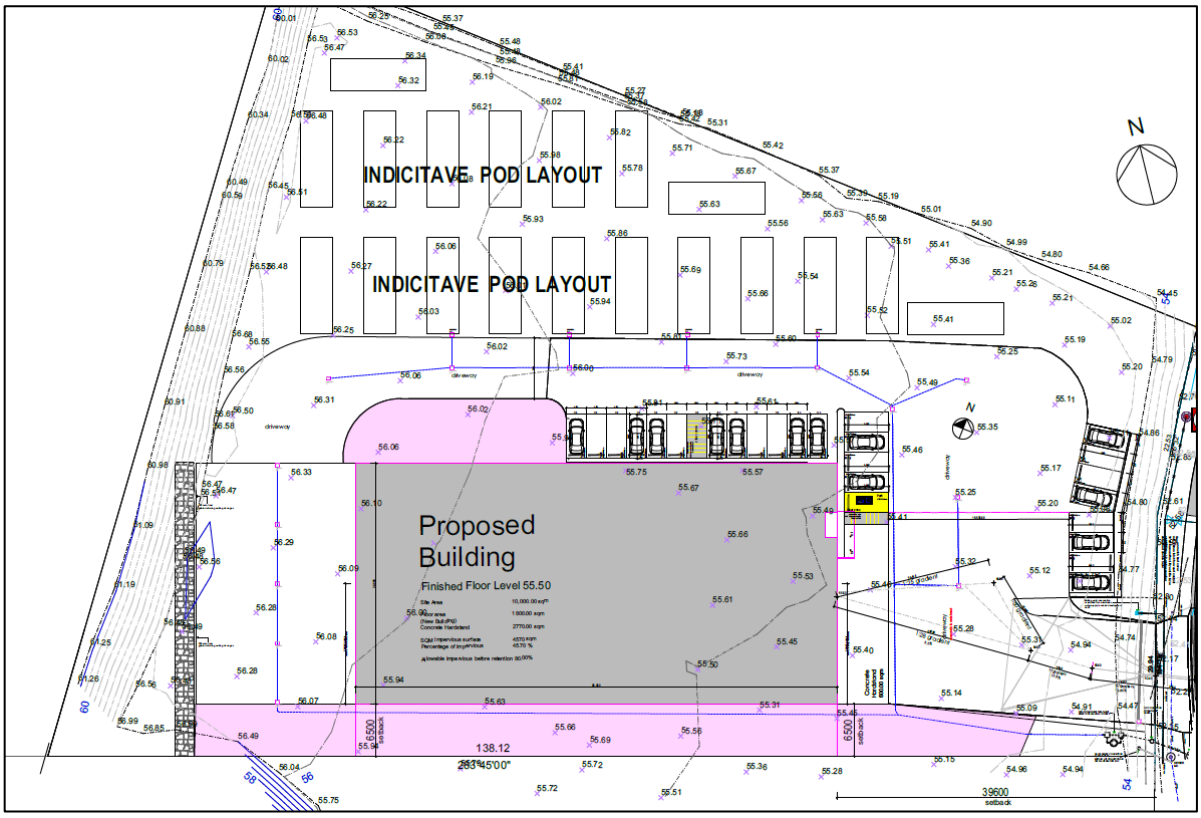


**Figure 4: Site plan (source: Marcus Ralph Design)**

### 1.3.1 PERMIT STAGING

If a permit is granted, the client would like to construct the driveway, sealed concrete areas and compacted gravel areas as part of an early works package, to ensure the site is ready for the construction of the warehouse once the materials are delivered.

To achieve this, we are requesting Council consider wording any subsequent conditions to allow these works to be completed prior to the commencement of the use.

# 2. PLANNING SCHEME REQUIREMENTS

## 2.1 GENERAL INDUSTRIAL ZONE

The site is subject to the *Tasmanian Planning Scheme - Brighton* and is zoned General Industrial. An assessment against relevant standards is provided below.

**Figure 5: The site in the General Industrial Zone (purple) – site area in red (source: www.thelist.tas.gov.au © State of Tasmania)**

### 2.1.1 ZONE PURPOSE STATEMENTS

> *19.1.1 - To provide for manufacturing, processing, repair, storage and distribution of goods and materials where there may be impacts on adjacent uses.*

The proposal is for a construction business under the manufacturing and processing use classification, which is a type of use/development supported in the zone and is consistent with the purpose of the zone.

> *19.1.2 - To provide for use and development that supports and does not adversely impact on industrial activity.*

The proposed use is not of a type, scale or intensity that would compromise or adversely impact on industrial activities within the zone.

### 2.1.2 USE CLASS

The proposal falls within the Manufacturing and Processing use class.

> *use of land for manufacturing, assembling or processing products other than Resource Processing. Examples include boat building, brick making, cement works, furniture making,*

*glass manufacturing, metal and wood fabrication, mineral processing and textile manufacturing.*

The use is permitted in the zone.

### 2.1.3 DEVELOPMENT STANDARDS FOR BUILDINGS AND WORKS

***19.4.1 Building Height***

***Objective**: To provide for a building height that:*

*(a) is necessary for the operation of the use; and*

*(b) minimises adverse impacts on adjoining properties.*

**SCHEME REQUIREMENTS**

***A1** – Building height must be not more than 20m.*

***P1** - Building height must be necessary for the operation of the use and not cause an unreasonable impact on adjoining properties, having regard to:*

*(a) the bulk and form of the building;*

*(b) separation from existing use on adjoining properties; and*

*(c) any buffers created by natural or other features.*

**RESPONSE**

The proposed warehouse will have a maximum height of approximately 7.8m, which complies with A1.

***Clause 19.4.2 – Setbacks***

***Objective**: That the building setback is appropriate for the site.*

**SCHEME REQUIREMENTS**

***A1** - Buildings must have setback from a frontage of:*

*(a) not less than 10m;*

*(b) not less than existing buildings on the site; or*

*(c) not more or less than the maximum and minimum setbacks of the buildings on adjoining properties.*

*…*

**RESPONSE**

The proposed warehouse will have a setback of approximately 39m from the frontage to the new public road within the approved subdivision.

### *19.4.3 - Landscaping*

***Objective:*** *That landscaping enhances the amenity and appearance of the streetscape where buildings are setback from the frontage.*

**SCHEME REQUIREMENTS**

***A1*** *- If a building is set back from a road, landscaping treatment must be provided along the frontage of the site:*

*(a) to a depth of not less than 6m; or*

*(b) not less than the frontage of an existing building if it is a lesser distance.*

***P1*** *- If a building is setback from a road, landscaping treatment must be provided along the frontage of the site, having regard to:*

*(a) the width of the setback;*

*(b) the width of the frontage;*

*(c) the topography of the site;*

*(d) existing vegetation on the site;*

*(e) the location, type and growth of the proposed vegetation; and*

*(f) any relevant local area objectives contained within the relevant Local Provisions Schedule.*

**RESPONSE**

Landscaping has been provided along the frontage of the site, which will align with the subsequent lot 14. The depth of the landscaping is approximately 5.2m to the first row of car parking spaces.

A response to P1 is provided.

**P1**

(a) & (b) Landscaping is proposed along the entire width of the frontage, except for the vehicle access and is sufficient in depth to provide considerable plantings which will significantly improve the visual amenity of the site and provide screening along the streetscape.

The depth of the landscaping is sufficient to provide an appropriate screen between the frontage and the proposed warehouse.

(c) The site is relatively flat with a gradual rise to the north-west. The provision of larger/taller plantings along the frontage provides an appropriate level of screening, catering for the rise in topography.

(d) only limited low-lying vegetation is present across the parent title, with no vegetation in the area in which the development is to be located.

(e) The landscaping schedule outlines the proposed vegetation, including location and type.

(f) n/a.

The proposal complies with P1.

## 2.2 BRIGHTON INDUSTRIAL HUB SPECIFIC AREA PLAN

As indicated above, the site is also subject to the S10 – Brighton Industrial Hub Specific Area Plan, as shown below.

**Figure 6: Extent of the S10 – Brighton Industrial Hub Specific Area Plan – subject site shown in red (source: www.thelist.tas.gov.au © State of Tasmania)**

Within the SAP, there are additional provisions which apply, as follows.

### 2.2.1 USE STANDARDS

***BRI – S10.6.1 Sensitive use***

***Objective:*** *That new sensitive use is not established within the Brighton Industrial Hub.*

**SCHEME REQUIREMENTS**

***A1*** *– Use or development is not sensitive use.*

***P1*** *– No performance criteria.*

**RESPONSE**

The proposed use is not a sensitive use and complies with A1.

## 2.3 BRIDGEWATER QUARRY SPECIFIC AREA PLAN

Whilst no part of the proposed development falls within the extent of the specific area plan, the north-eastern portion of the parent title is located within the Bridgewater Quarry Specific Area Plan, as illustrated below.

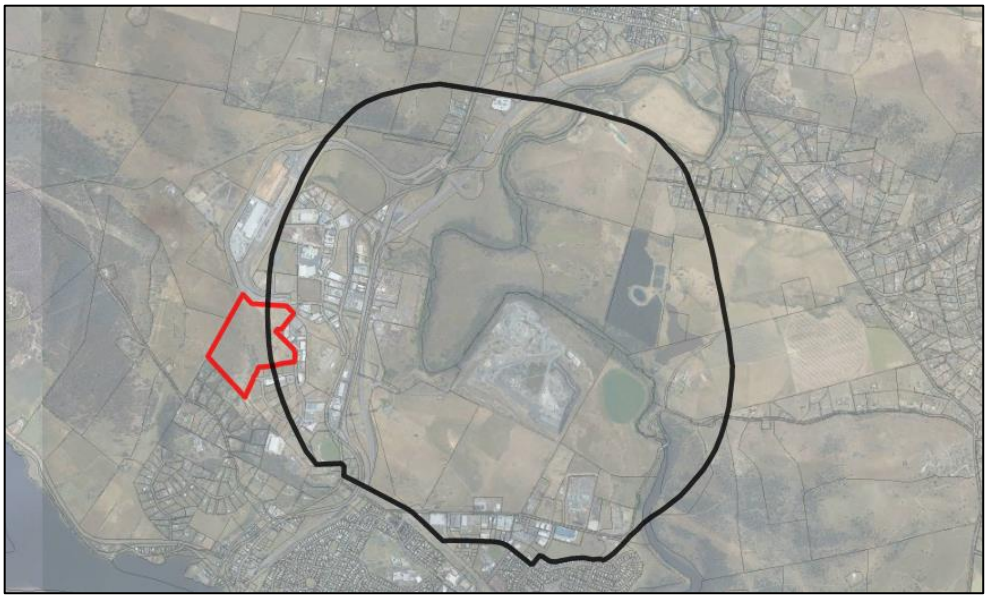

**Figure 7: Extent Bridgewater Quarry Specific Area Plan - site location in red (source: www.thelist.tas.gov.au © State of Tasmania)**

### 2.3.1 DEVELOPMENT WITHIN BRIDGEWATER QUARRY SPECIFIC AREA PLAN

***BRI-S4.7.1 – Development within Bridgewater Quarry Specific Area Plan***

***Objective:*** *That development is compatible with the operations of the Bridgewater Quarry.*

**SCHEME REQUIREMENTS**

***P1*** *- Buildings and works must not result in potential to interfere or conflict with quarry operations having regard to:*

*(a) the nature of the quarry; including:*

*(i) operational characteristics;*

*(ii) scale and intensity;*

*(iii) degree of hazard or pollution that may be emitted from the activity;*

*(b) the degree of encroachment of development or use into the Bridgewater Quarry Attenuation Area; and*

*(c) measures in the design, layout and construction of the development to eliminated, mitigate or manage effects of the quarry; and*

*(d) any advice from the Bridgewater Quarry operator.*

…

**RESPONSE**

A portion of the parent title falls within the extent of the specific area plan. However, the approved Lot 104 and future Lot 14, on which the proposed development is sited does not fall within the extent of the overlay. Therefore, no buildings or works proposed as part of this application fall within the extent of the SAP.

# 3. CODES

## 3.1 PARKING AND SUSTAINABLE TRANSPORT CODE

### 3.1.1 USE STANDARDS

***Clause C2.5.1 – Car parking numbers***

***Objective:*** *That an appropriate level of car parking spaces are provided to meet the needs of the use.*

**SCHEME PROVISIONS**

***A1*** *– The number of on-site car parking spaces must be no less than the number specified in Table C2.1, excluding if:*

*(a) the site is subject to a parking plan for the area adopted by council, in which case parking provision (spaces or cash-in-lieu) must be in accordance with that plan;*

*(b) the site is contained within a parking precinct plan and subject to Clause C2.7;*

*(c) the site is subject to Clause C2.5.5; or*

*(d) it relates to an intensification of an existing use or development or a change of use where:*

*(i) the number of on-site car parking spaces for the existing use or development specified in Table C2.1 is greater than the number of car parking spaces specified in Table C2.1 for the proposed use or development, in which case no additional on-site car parking is required; or*

*(ii) the number of on-site car parking spaces for the existing use or development specified in Table C2.1 is less than the number of car parking spaces specified in Table C2.1 for the proposed use or development, in which case on-site car parking must be calculated as follows:*

*N = A + (C- B)*

*N = Number of on-site car parking spaces required*

*A = Number of existing on site car parking spaces*

*B = Number of on-site car parking spaces required for the existing use or development specified in Table C2.1*

*C= Number of on-site car parking spaces required for the proposed use or development specified in Table C2.1.*

***P1.1*** *- The number of on-site car parking spaces for uses, excluding dwellings, must meet the reasonable needs of the use, having regard to:*

*(a) the availability of off-street public car parking spaces within reasonable walking distance of the site;*

*(b) the ability of multiple users to share spaces because of:*

*(i) variations in car parking demand over time; or*

*(ii) efficiencies gained by consolidation of car parking spaces;*

*(c) the availability and frequency of public transport within reasonable walking distance of the site;*

*(d) the availability and frequency of other transport alternatives;*

*(e) any site constraints such as existing buildings, slope, drainage, vegetation and landscaping;*

*(f) the availability, accessibility and safety of on-street parking, having regard to the nature of the roads, traffic management and other uses in the vicinity;*

*(g) the effect on streetscape; and*

*(h) any assessment by a suitably qualified person of the actual car parking demand determined having regard to the scale and nature of the use and development.*

…

**RESPONSE**

As per A1 and Table C2.1, the number of car parking spaces required for the use is as follows:

> *Manufacturing and Processing - 1 space per 200m² of floor area or 2 spaces per 3 employees, whichever is greater.*

The site will support 15 full-time employees, along with approximately 10 sub-contractors at any one time.

The warehouse has a floor area of 1,800m2 which would generate a requirement for 9 car parking spaces. However, based on the number of staff, the parking requirement is 17 (2 spaces per 3 employees).

The proposed development provides 25 on-site car parking spaces, including one DDA space.

The proposal complies with A1.

***Clause C2.5.4 – Loading bays***

***Objective:*** *That adequate access for goods delivery and collection is provided, and to avoid unreasonable loss of amenity and adverse impacts on traffic flows.*

**SCHEME PROVISIONS**

***A1 -*** *A loading bay must be provided for uses with a floor area of more than 1000m² in a single occupancy.*

***P1*** *- Adequate space for loading and unloading of vehicles must be provided, having regard to:*

*(a) the type of vehicles associated with the use;*

*(b) the nature of the use;*

*(c) the frequency of loading and unloading;*

*(d) the location of the site;*

*(e) the nature of traffic in the surrounding area;*

*(f) the area and dimensions of the site; and*

*(g) the topography of the site;*

*(h) the location of existing buildings on the site; and*

*(i) any constraints imposed by existing development.*

**RESPONSE**

The warehouse has a floor area of 1,800m$^2$ and loading/unloading of materials and pods will occur within the warehouse transport bay. The truck turning paths have been updated to demonstrate this can occur without impacting the internal assembly areas.

However, operations of this nature require a degree of flexibility to manage workloads during high demand periods. As outlined previously, during these periods' pods stored on the gravel area to the

north for minor fit outs may require loading from the sealed circulation area, adjacent the northern elevation of the warehouse. Where required, this will occur to the west of the parking spaces along the northern elevation of the warehouse, ensuring no impact on vehicles using the parking area.

In these instances, a response to the performance criteria has been provided.

**P1**

(a) & (b) The sealed external circulation area on the northern side of the warehouse may be used occasionally to load pods during high demand periods. Once loaded, the trucks will continue through the warehouse transport bay and exit the site in a forward direction.

The section of internal circulation west of the parking spaces along the northern elevation of the warehouse is only accessed by trucks, therefore any loading in this area is not expected to impact the proposed parking and circulation areas to the east.

(c) As outlined above, the frequency of loading and unloading will vary day to day, depending on contract requirements (which determine when pods must be completed and collected and when materials are required).

(d) & (e) The site is within an industrial precinct and all day-to-day activities will be undertaken wholly within the site. The nature of traffic generated by the operation will be consistent with the industrial nature of traffic in the area.

(f) the size of the warehouse, circulation and storage areas are sufficient to enable appropriate loading/unloading on the site.

The application is being lodged on the parent title, as the final plan of survey for the approved subdivision has yet to be sealed. If the proposal were considered utilising the approved subdivision as a reference point, the proposal would be sited on Lot 104 which has an area of approximately 2.156ha. This is more than sufficient to cater for the proposed operations, including the approved development on Lot 104 (DA 2022/142).

Notwithstanding, the proposal has been designed and sited to also comply with the proposed future lot layout (outlined in section 1.2 of this report), which will see Lot 104 divided in two, creating Lot 14 and Lot 15.

The approved development (DA 2022/142) will be contained within Lot 15 and the proposed Podmatrix development will be contained on Lot 14, which will have an area of 1ha which is sufficient to cater for loading/unloading.

(g) topography has no impact on the proposed operations on site.

(h) & (i) n/a.

The proposal complies with P1.

### 3.1.2 DEVELOPMENT STANDARDS

***Clause C2.6.1 – Construction of parking areas***

***Objective:*** *That parking areas are constructed to an appropriate standard.*

**SCHEME PROVISIONS**

***A1*** *- All parking, access ways, manoeuvring and circulation spaces must:*

*(a) be constructed with a durable all weather pavement;*

*(b) be drained to the public stormwater system, or contain stormwater on the site; and*

*(c) excluding all uses in the Rural Zone, Agriculture Zone, Landscape Conservation Zone, Environmental Management Zone, Recreation Zone and Open Space Zone, be surfaced by a spray seal, asphalt, concrete, pavers or equivalent material to restrict abrasion from traffic and minimise entry of water to the pavement.*

***P1*** *- All parking, access ways, manoeuvring and circulation spaces must be readily identifiable and constructed so that they are useable in all weather conditions, having regard to:*

*(a) the nature of the use;*

*(b) the topography of the land;*

*(c) the drainage system available;*

*(d) the likelihood of transporting sediment or debris from the site onto a road or public place;*

*(e) the likelihood of generating dust; and*

*(f) the nature of the proposed surfacing.*

**RESPONSE**

The accompanying plans demonstrate that all formal/designated parking, access ways, manoeuvring and circulation areas will be sealed concrete and drained (via a detention tank and treatment system) to public stormwater infrastructure.

On occasion, during high demand periods, employees and subcontractors may need to park near pods stored on the gravel area, to conveniently access tools and complete minor fit outs. As requested by Council, a response to the performance criteria has been provided.

**P1**

(a) As shown on the plans, the gravel area may be used for storage and minor fit out activities during high demand periods. During these times, contractors may need to park close to the pods for efficiency and easy access to tools that may be stored in their vehicles.

The use of 20mm FCR in this area is considered appropriate for these activities, based on the operator's experience.

(b) the topography of the site is not expected to have any impact on the construction of use of the parking/circulation areas.

(c) A stormwater system has been designed to cater for post-development runoff from impervious areas. Stormwater will be treated and detained on-site via a detention and treatment tank, before discharging to the existing public system.

Please refer to the accompanying stormwater report and design documents.

(d) & (e) As outlined above, the operator has experience operating on 20mm FCR and has advised the gravel diameter is appropriate for the intended use. Notwithstanding, the gravel area is significantly setback from the public roadway.

Activities on the gravel area will be of a low intensity (i.e. storing pods or undertaking fit outs). This is undertaken by staff and contractors within the immediate vicinity of the pods and does not require any frequent vehicle movements that have potential to generate dust.

The proposed surface and extent of activities on the gravel area are sufficient to mitigate and avoid risks/impacts associated with dust generation.

(f) as outlined above, the surface of the area to the north will be gravel (comprising 20mm FCR).

Use of this material significantly reduces potential for overland flow and post-development stormwater discharge from the site, as opposed to a full sealing of this area.

The proposal complies with P1.

***Clause C2.6.2 – Design and layout of parking areas***

***Objective:*** *That parking areas are designed and laid out to provide convenient, safe and efficient parking.*

**SCHEME PROVISIONS**

***A1 -*** *Parking, access ways, manoeuvring and circulation spaces must either:*

*(a) comply with the following:*

*(i) have a gradient in accordance with Australian Standard AS 2890 - Parking facilities, Parts 1-6;*

*(ii) provide for vehicles to enter and exit the site in a forward direction where providing for more than 4 parking spaces;*

*(iii) have an access width not less than the requirements in Table C2.2;*

*(iv) have car parking space dimensions which satisfy the requirements in Table C2.3;*

*(v) have a combined access and manoeuvring width adjacent to parking spaces not less than the requirements in Table C2.3 where there are 3 or more car parking spaces;*

*(vi) have a vertical clearance of not less than 2.1m above the parking surface level; and*

*(vii) excluding a single dwelling, be delineated by line marking or other clear physical means; or*

*(b) comply with Australian Standard AS 2890- Parking facilities, Parts 1-6.*

***P1 -*** *All parking, access ways, manoeuvring and circulation spaces must be designed and readily identifiable to provide convenient, safe and efficient parking, having regard to:*

*(a) the characteristics of the site;*

*(b) the proposed slope, dimensions and layout;*

*(c) useability in all weather conditions;*

*(d) vehicle and pedestrian traffic safety;*

*(e) the nature and use of the development;*

*(f) the expected number and type of vehicles;*

*(g) the likely use of the parking areas by persons with a disability;*

*(h) the nature of traffic in the surrounding area;*

*(i) the proposed means of parking delineation; and*

*(j) the provisions of Australian Standard AS 2890.1:2004 - Parking facilities, Part 1: Off-street car parking and AS 2890.2 -2002 Parking facilities, Part 2: Off-street commercial vehicle facilities.*

**RESPONSE**

A response to the performance criteria is required, as the grade of the access within 6m of the frontage exceeds the minimum of 1:8 (12.5%) as specified in the Australian Standards.

**P1**

(a) & (b) the parking, access ways, manoeuvring and circulation spaces have been designed to cater for commercial, staff and contractor vehicles – the section diagrams for the driveway/access provide further clarification.

(c) the access driveway will be sealed with concrete, ensuring useability in all weather conditions. The compacted gravel area to the north will be used for both storing and assembling the pods/transportable homes (where required), which are then collected for delivery off-site.

This area is setback significantly from the frontage, significantly mitigating the potential for loose gravel/debris to be transported onto the roadway.

(d) the parking areas and access have substantial width, ensuring ample separation from parking areas and manoeuvring areas.

(e) & (f) as outlined previously, the parking and circulation areas have been designed to accommodate the expected type and frequency of commercial vehicles that will enter/exit the site.

(g) a disabled space has been provided on-site if required.

(h) the nature of traffic in the area is commercial and will increase as additional lots are developed. The proposal, along with nature and frequency of vehicle movements is consistent with the nature of use in the area.

(i) parking spaces will be line-marked to maximise efficiency on-site and ensure appropriate safety.

(j) the parking space dimensions, access widths and turning aisles comply with the relevant Australian Standards, however discretion is required for the initial driveway grades into the site.

The access has been designed to accommodate the range of commercial vehicles entering the site and is capable of compliance with P1.

***Clause C2.6.3 – Number of accesses for vehicles***

***Objective:*** *That:*

*(a) access to land is provided which is safe and efficient for users of the land and all road network users, including but not limited to drivers, passengers, pedestrians and cyclists by minimising the number of vehicle accesses;*

*(b) accesses do not cause an unreasonable loss of amenity of adjoining uses; and*

*(c) the number of accesses minimise impacts on the streetscape.*

**SCHEME PROVISIONS**

***A1*** *- The number of accesses provided for each frontage must:*

*(a) be no more than 1; or*

*(b) no more than the existing number of accesses,*

*whichever is the greater.*

…

**RESPONSE**

Vehicle access to the site will be provided via a single access from the frontage, providing two-way entry and exit as shown on the accompanying plan.

The proposal satisfies A1.

***Clause C2.6.5 – Pedestrian access***

***Objective:*** *That pedestrian access within parking areas is provided in a safe and convenient manner.*

**SCHEME PROVISIONS**

***A1*** *- Uses that require 10 or more car parking spaces must:*

*(a) have a 1m wide footpath that is separated from the access ways or parking aisles, excluding where crossing access ways or parking aisles, by:*

*(i) a horizontal distance of 2.5m between the edge of the footpath and the access way or parking aisle; or*

*(ii) protective devices such as bollards, guard rails or planters between the footpath and the access way or parking aisle; and*

*(b) be signed and line marked at points where pedestrians cross access ways or parking aisles.*

***A1.1*** *- …*

***P1*** *- Safe and convenient pedestrian access must be provided within parking areas, having regard to:*

*(a) the characteristics of the site;*

*(b) the nature of the use;*

*(c) the number of parking spaces;*

*(d) the frequency of vehicle movements;*

*(e) the needs of persons with a disability;*

*(f) the location and number of footpath crossings;*

*(g) vehicle and pedestrian traffic safety;*

*(h) the location of any access ways or parking aisles; and*

*(i) any protective devices proposed for pedestrian safety.*

**RESPONSE**

A1 requires the footpath to have a horizontal distance of 2.5m from the edge of footpath to the access way or parking aisle. A 1m wide pedestrian footpath has been provided along the northern elevation of the warehouse, between the warehouse and the car parking spaces. The footpath continues around the eastern corner of the building, providing access to the reception/office and DDA space.

A 1m wide footpath is also provided for the 8 parking spaces adjacent to the site entrance.

The proposed footpaths are separated from the internal accessways by approximately 2.8m (comprised of approximately 300mm separation from the edge of the footpaths to the wheel stops for the adjoining parking spaces and the 5.4m length of the parking spaces).

A crossing portion of the footpath directly outside the entrance to the office is provided and line-marked, along with an additional area along the northern parking spaces. However, pedestrians will need to cross the internal circulation area from the parking spaces adjacent to the site access to enter the proposed warehouse.

A response to P1 is provided.

**P1**

(a) The site is within an industrial area, supporting industrial activities and associated vehicle movements.

(b) The proposed use is for a construction yard, to be used exclusively by construction staff and contractors fabricating and assembling pods. These activities will be undertaken within the warehouse and the northern gravel area, during periods of high contract demand.

(c) The use generates a requirement for 17 on-site parking spaces, with 25 currently proposed to cater for higher demand periods where additional contractors may be required.

(d) Staff vehicle movements will generally occur in the early morning and mid-afternoon, corresponding with general work hours identified in section 1.3 of this report. However, contractors may occasionally come and go at various periods throughout the day.

Materials will be delivered on-site as required. The frequency of deliveries will vary depending on workloads and contract obligations.

It is anticipated that staff and contractors will be familiar with the site and the day-to-day operations, ensuring safe and efficient pedestrian movement within the yard. The access widths and parking areas are sufficient in dimensions to allow staff to walk along the access and for other vehicles to pass.

The proposal complies with P1.

***Clause C2.6.6 – Loading bays***

***Objective:*** *That the area and dimensions of loading bays are adequate to provide safe and efficient delivery and collection of goods.*

**SCHEME PROVISIONS**

***A1*** *- The area and dimensions of loading bays and access way areas must be designed in accordance with Australian Standard AS 2890.2-2002, Parking facilities, Part 2: Off-street commercial vehicle facilities, for the type of vehicles likely to use the site.*

***P1 -*** *Loading bays must have an area and dimensions suitable for the use, having regard to:*

*(a) the types of vehicles likely to use the site;*

*(b) the nature of the use;*

*(c) the frequency of loading and unloading;*

*(d) the area and dimensions of the site;*

*(e) the topography of the site;*

*(f) the location of existing buildings on the site; and*

*(g) any constraints imposed by existing development.*

**RESPONSE**

As outlined in the response to C2.5.4, the transport through bay within the warehouse will be used for loading/unloading. However, these arrangements are not consistent with the Australian Standard requirements.

A response to P1 has been provided.

**P1**

(a) Contractor vehicles and flat-bed trucks will be the primary vehicle types that will access the site. The through-bay has been designed with sufficient width to allow the largest design vehicles (flat-bed trucks) to utilise the space for loading/unloading.

(b) & (c) Given the pods being constructed are relatively uniform, the materials required are relatively uniform, allowing materials to be delivered in bulk and stored on-site. This assists in reducing the day-to-day frequency of vehicle movements.

Notwithstanding, all loading/unloading will occur wholly within the site which is within an industrial precinct where such movements and activities are expected.

(d) the current parent title, approved Lot 104 and proposed Lot 14 all have sufficient dimensions to cater for the proposed use/development.

(e) n/a

(f) n/a

(g) n/a

The flexible on-site loading/unloading area is suitable for the proposed use and day to day operations and complies with P1.

***A2*** *- The type of commercial vehicles likely to use the site must be able to enter, park and exit the site in a forward direction in accordance with Australian Standard AS 2890.2 – 2002, Parking Facilities, Part 2: Parking facilities - Off-street commercial vehicle facilities.*

***P2 -*** *Access for commercial vehicles to and from the site must be safe, having regard to:*

*(a) the types of vehicles associated with the use;*

*(b) the nature of the use;*

*(c) the frequency of loading and unloading;*

*(d) the area and dimensions of the site;*

*(e) the location of the site and nature of traffic in the area of the site;*

*(f) the effectiveness or efficiency of the surrounding road network; and*

*(g) site constraints such as existing buildings, slope, drainage, vegetation, parking and landscaping.*

**RESPONSE**

Commercial vehicles entering/exiting the site will be able to do so in a forward direction, as outlined previously.

## 3.2 ROAD AND RAILWAY ASSETS CODE

### 3.2.1 USE STANDARDS

***Clause C3.5.1 – Traffic generation at a vehicle crossing, level crossing or new junction***

***Objective:*** *To minimise any adverse effects on the safety and efficiency of the road or rail network from vehicular traffic generated from the site at an existing or new vehicle crossing or level crossing or new junction.*

**SCHEME PROVISIONS**

***A1.2*** *- For a road, excluding a category 1 road or a limited access road, written consent for a new junction, vehicle crossing, or level crossing to serve the use and development has been issued by the road authority.*

***P1*** *- Vehicular traffic to and from the site must minimise any adverse effects on the safety of a junction, vehicle crossing or level crossing or safety or efficiency of the road or rail network, having regard to:*

*(a) any increase in traffic caused by the use;*

*(b) the nature of the traffic generated by the use;*

*(c) the nature of the road;*

*(d) the speed limit and traffic flow of the road;*

*(e) any alternative access to a road;*

*(f) the need for the use;*

*(g) any traffic impact assessment; and*

*(h) any advice received from the rail or road authority.*

**RESPONSE**

With respect to A1.2, no consent has yet been issued from the road authority for new crossovers. It is understood that the approved subdivision plan for the site does not include pre-determined/pre-constructed crossovers.

However, the kerbing along the roadside will be rolled curb, consistent with the existing road network and therefore only a concrete apron between the rolled curb and site boundary is required.

**P1**

Sections of the approved subdivision are still under construction, however it is understood the lot boundaries have been established and the public road is road finished. As such, existing traffic movements within the immediately adjoining streets is relatively low. The movements generated by the proposed use/development will be of a similar nature.

The traffic speeds within the immediate streets are signposted at 50km/hr which suits the nature of the area and types of vehicles. Excellent visibility is afforded in both directions along the road for vehicles exiting the site.

Given the existing nature of the area and the intended use/development, the proposal is not expected to result in any adverse effects on the safety of the road network.

## 3.3 ELECTRICITY TRANSMISSION INFRASTRUCTURE PROTECTION CODE

The existing parent title is subject to the electricity overlay. However, the overlay is restricted to the northern quarter of the site. The proposed development will be undertaken on approved Lot 104, which will divided under a separate application to create Lot 14 and Lot 15.

No part of the proposed development extends within the overlay.

## 3.4 ATTENUATION CODE

Whilst portions of the parent title are located within the extent of the attenuation area for the quarry, no part of lot 14 or any buildings/works proposed fall within the extent of the overlay.

## 3.5 SIGNS CODE

The proposal includes three signs. The workshop and Podmatrix signs are considered as wall signs. The office sign could potentially fall under either of the following sign types:

- awning fascia sign;
- canopy sign

Clause C1.3.2.1 states that if a sign does not readily fit a defined sign type, it must be categorised into the most similar sign type.

A canopy sign is defined as follows:

> *means a sign attached to the perimeter of a canopy on a building for the purpose of shielding from the elements such as, signs on the fascia of a canopy over a service station.*

The office sign along the front elevation is attached to a canopy/awning over the entrance, which provides weather protection.

A canopy sign can be provided within the General Industrial Zone, in accordance with Table C1.6.

### 3.5.1 DESIGN AND SITING OF SIGNS

***C1.6.1 – Design and siting of signs***

***Objective:*** *That:*

*(a) signage is well designed and sited; and*

*(b) signs do not contribute to visual clutter or cause an unreasonable loss of visual amenity to the surrounding area.*

**SCHEME PROVISIONS**

***A1*** *– A sign must:*

*(a) be located within the applicable zone for the relevant sign type set out in Table C1.6; and*

*(b) meet the sign standards for the relevant sign type set out in Table C1.6, excluding for the following sign types, for which there is no Acceptable Solution:*

*(i) roof sign;*

*(ii) sky sign; and*

*(iii) billboard.*

***P1.1 -*** *A sign must:*

*(a) be located within an applicable zone for the relevant sign type as set out in Table C1.6; and*

*(b) be compatible with the streetscape or landscape, having regard to:*

*(i) the size and dimensions of the sign;*

*(ii) the size and scale of the building upon which the sign is proposed;*

*(iii) the amenity of surrounding properties;*

*(iv) the repetition of messages or information;*

*(v) the number and density of signs on the site and on adjacent properties; and*

*(vi) the impact on the safe and efficient movement of vehicles and pedestrians.*

**RESPONSE**

The 'office' canopy sign complies with A1(a) and (b) as it is an applicable sign type in the zone and the canopy on which the sign is affixed has a minimum height above NGL of 2.5m.

The proposed 'warehouse' and 'Podmatrix' wall signs are also an applicable sign type in the zone.

The 'workshop' sign has a total area of approximately 4.7m$^2$.

This area can be reduced to ensure compliance with A1 through the RFI, however the 'Podmatrix' sign also does not comply with A1.

A response to the performance criteria has been provided.

**P1.1**

(a) both wall signs are located within the applicable zone for the relevant sign type in Table C1.6.

(b), (i) & (ii) Both signs are significantly setback from the frontage and will be somewhat screened by the proposed landscaping.

The overall size of each sign is not substantial in the context of the building on which they are to be affixed, along with the commercial scale of existing and proposed development within the industrial precinct.

(iii) the signs face the frontage and all immediately adjoining/adjacent properties are also zoned industrial.

(iv) Each sign provides different information, one relating to the function of the building and the other relating to the business ownership. As such, there is no unreasonable repetition of messages.

(v) three signs are proposed along the front elevation of the building. Given the size of the proposed warehouse building to which they are to be affixed, along with the substantial frontage of the lot and setback of the building, the signs are not expected to have any unreasonable impact on the streetscape.

(vi) the signs are located above ground level and are significantly setback from the street. The signs are not expected to have any impact on the safety of pedestrians or staff.

***A2** – A sign must be not less than 2m from the boundary of any lot in the General Residential Zone, Inner Residential Zone, Low Density Residential Zone, Rural Living Zone or Landscape Conservation Zone.*

…

**RESPONSE**

The parent title adjoins land zoned Rural Living to the south, however the proposed warehouse is located well over 2m from that land. Based on the approved subdivision, Lot 14 and the proposed signs are not within 2m of any of the zones identified above.

***A3*** *– The number of signs for each business or tenancy on a road frontage of a building must be no more than:*

*(a) 1 of each sign type, unless otherwise stated in Table C1.6;*

*(b) 1 window sign for each window;*

*(c) 3 if the street frontage is less than 20m in length; and*

*(d) 6 if the street frontage is 20m or more.*

***P3*** *- The number of signs for each business or tenancy on a street frontage must:*

*(a) not unreasonably increase in the existing level of visual clutter in the streetscape, and where possible, reduce any existing visual clutter in the streetscape by replacing existing signs with fewer, more effective signs; and*

*(b) not involve the repetition of messages or information.*

**RESPONSE**

The site has a frontage in excess of 20m, however two wall signs are proposed which does not comply with A3(a). Therefore, a response to P3 has been provided.

**P3**

The approved subdivision on the parent title is still very new and whilst there have been a number of applications lodged and others being prepared, the site is still relatively undeveloped.

Given the length of the frontage to Lot 14, side boundary and frontage setback of the proposed warehouse, the proposed signs are not expected to result in any unreasonable visual clutter within the streetscape. Each of the three signs proposed provide different information, ensuring no repetition of messages or information.

***C1.6.2 – Illuminated signs***

***Objective:*** *That:*

*(a) illuminated signs are compatible with the streetscape;*

*(b) the cumulative impact of illuminated signs on the character of the area is managed, including the need to avoid visual disorder or clutter of signs; and*

*(c) any potential negative impacts of illuminated signs on road safety and pedestrian movement are minimised.*

**SCHEME PROVISIONS**

***A1*** *– No acceptable solution.*

***P1 -*** *An illuminated sign must not cause an unreasonable loss of amenity to adjacent properties or have an unreasonable effect on the safety, appearance or efficiency of a road, and must be compatible with the streetscape, having regard to:*

*(a) the location of the sign;*

*(b) the size of the sign;*

*(c) the intensity of the lighting;*

*(d) the hours of operation of the sign;*

*(e) the purpose of the sign;*

*(f) the sensitivity of the area in terms of view corridors, the natural environment and adjacent residential amenity;*

*(g) the intended purpose of the changing message of the sign;*

*(h) the percentage of the sign that is illuminated with changing messages;*

*(i) proposed dwell time; and*

*(j) whether the sign is visible from the road and if so the proximity to and impact on an electronic traffic control device.*

**RESPONSE**

None of the proposed signs are to be illuminated.

***A2*** *– An illuminated sign visible from public places in adjacent roads must not create the effect of flashing, animation or movement, unless it is providing direction or safety information.*

***P2*** *– No performance criterion.*

**RESPONSE**

No illuminated signs are proposed.

# 4. SUMMARY

The application seeks approval for a manufacturing and processing use on the site at Lot 1, Greenbanks Road.

A subdivision application was approved on the site and is in the process of being constructed, however the final plan is yet to be sealed. According to the approved subdivision plan, the proposed development is to occur on Lot 104. Therefore, the current application has been made on the existing parent title.

However, once the approved subdivision and plan of survey are sealed, the developer intends to lodge an amendment to divide Lot 104 in half to create Lots 14 and 15. The proposed development has been designed and sited to be consistent with the both the approved lot layout and future intended layout.

The construction yard/warehouse will provide a permanent place of operations for Podmatrix, allowing the existing temporary yard on the northern side of the parent title to cease operations and be removed.

# Submission to Planning Authority Notice

| | | | |
|---|---|---|---|
| **Council Planning Permit No.** | DA 2023 / 00168 | **Council notice date** | 9/10/2023 |
| **TasWater details** | | | |
| **TasWater Reference No.** | TWDA 2023/01419-BTN | **Date of response** | 18/10/2023 |
| **TasWater Contact** | Robert Stapleton<br>Scott James (Trade Waste) | **Phone No.** | 0417279866<br>0417240264 |
| **Response issued to** | | | |
| **Council name** | BRIGHTON COUNCIL | | |
| **Contact details** | development@brighton.tas.gov.au | | |
| **Development details** | | | |
| **Address** | LOT 1 GREENBANKS RD, BRIDGEWATER | **Property ID (PID)** | 9500768 |
| **Description of development** | Storage - Contractors Yard | | |

**Schedule of drawings/documents**

| Prepared by | Drawing/document No. | Revision No. | Date of Issue |
|---|---|---|---|
| Marcus Ralph – Building Designer | Job: 2023-948 - Dwg: 948-06 | A01 | 22/03/2023 |

**Conditions**

**SUBMISSION TO PLANNING AUTHORITY NOTICE OF PLANNING APPLICATION REFERRAL**

Pursuant to the *Water and Sewerage Industry Act* 2008 (TAS) Section 56P(1) TasWater imposes the following conditions on the permit for this application:

**CONNECTIONS, METERING & BACKFLOW**

1. A suitably sized water supply with metered connection and sewerage system and connection to the development must be designed and constructed to TasWater's satisfaction and be in accordance with any other conditions in this permit.
2. Any removal/supply and installation of water meters and/or the removal of redundant and/or installation of new and modified property service connections must be carried out by TasWater at the developer's cost.
3. Prior to commencing construction/use of the development, any water connection utilised for construction/the development must have a backflow prevention device and water meter installed, to the satisfaction of TasWater.

**TRADE WASTE**

4. Prior to the commencement of operation, the developer/property owner must obtain Consent to discharge Trade Waste from TasWater. (If applicable).
5. The developer must install appropriately sized and suitable pre-treatment devices prior to gaining Consent to discharge.
6. The Developer/property owner must comply with all TasWater conditions prescribed in the Trade Waste Consent

**ASSET CREATION & INFRASTRUCTURE WORKS**

7. Prior to the issue of a Certificate for Certifiable Work, the infrastructure works associated with TasWater EDA: TWPA 2022/00034-BTN (under council permit SA 2020 / 00050 – TW Ref: TWDA 2021/00008-BTN) must be completed and a Certificate of Practical Completion issued by TasWater, so that TasWater has ownership of the infrastructure and can authorise new connection related works. If this does not occur, then the developer of the warehouse, under this permit, (permit DA 2023 / 00168

– TW Ref: TWDA 2023/01419-BTN) must complete the required infrastructure works to the satisfaction of TasWater as part of the conditions for a Certificate for Certifiable Work.

Should the mains extensions and property connections for the proposed sub-division on GREENBANKS RD, BRIDGEWATER be completed prior to the lodgement of the application for Certificate for Certifiable Work occurs, then the following conditions 9, 10, 11, 12, 13, 14, 15, 16 and 18 are to be considered satisfied.

8. Plans submitted with the application for Certificate(s) for Certifiable Work (Building and/or Plumbing) must, to the satisfaction of TasWater show, all existing, redundant and/or proposed property services and mains.
9. Prior to the issue of a Certificate for Certifiable Work (Building and/or Plumbing) to construct new infrastructure the developer must obtain from TasWater Engineering Design Approval for new TasWater infrastructure. The application for Engineering Design Approval must include engineering design plans prepared by a suitably qualified person showing the hydraulic servicing requirements for water and sewerage to TasWater's satisfaction.
10. Prior to works commencing, a Permit to Construct must be applied for and issued by TasWater. All infrastructure works must be inspected by TasWater and be to TasWater's satisfaction.
11. In addition to any other conditions in this permit, all works must be constructed under the supervision of a suitably qualified person in accordance with TasWater's requirements.
12. Prior to the issue of a Certificate for Certifiable Work (Building and/or Plumbing) / Certificate of Water and sewerage Compliance (Building and/or Plumbing) all additions, extensions, alterations or upgrades to TasWater's water and sewerage infrastructure required to service the development, are to be completed generally as shown on, and in accordance with, the plans listed in the schedule of drawings/documents, and are to be constructed at the expense of the developer to the satisfaction of TasWater, with live connections performed by TasWater.
13. After testing/disinfection, to TasWater's requirements, of newly created works, the developer must apply to TasWater for connection of these works to existing TasWater infrastructure, at the developer's cost.
14. At practical completion of the water and sewerage works and prior to applying to TasWater for a Certificate of Water and Sewerage Compliance (Building and/or Plumbing), the developer must obtain a Certificate of Practical Completion from TasWater for the works that will be transferred to TasWater. To obtain a Certificate of Practical Completion:
    a. Written confirmation from the supervising suitably qualified person certifying that the works have been constructed in accordance with the TasWater approved plans and specifications and that the appropriate level of workmanship has been achieved.
    b. A request for a joint on-site inspection with TasWater's authorised representative must be made.
    c. Work As Constructed drawings and documentation must be prepared by a suitably qualified person to TasWater's satisfaction and forwarded to TasWater.
15. Upon TasWater issuing a Certificate of Practical Completion, the newly constructed infrastructure is deemed to have transferred to TasWater.
16. After the Certificate of Practical Completion has been issued, a 12-month defects liability period applies to this infrastructure. During this period all defects must be rectified at the developer's cost and to the satisfaction of TasWater. A further 12-month defects liability period may be applied to defects after rectification. TasWater may, at its discretion, undertake rectification of any defects at the developer's cost. Upon completion, of the defects liability period the developer must request TasWater to issue a "Certificate of Final Acceptance". TasWater will release any security held for the defect's liability period.
17. The developer must take all precautions to protect existing TasWater infrastructure. Any damage caused to existing TasWater infrastructure during the construction period must be promptly reported

to TasWater and repaired by TasWater at the developer's cost.

18. A construction management plan must be submitted with the application for TasWater Engineering Design Approval. The construction management plan must detail how the new TasWater infrastructure will be constructed while maintaining current levels of services provided by TasWater to the community. The construction plan must also include a risk assessment and contingency plans covering major risks to TasWater during any works. The construction plan must be to the satisfaction of TasWater prior to TasWater's Engineering Design Approval being issued.

**DEVELOPER CHARGES**

19. Prior to TasWater issuing a Certificate(s) for Certifiable Work (Building) and/or (Plumbing), the applicant or landowner as the case may be, must pay a developer charge totalling $2,486.16 to TasWater for water infrastructure for 1.415 additional Equivalent Tenements, indexed by the Consumer Price Index All groups (Hobart) from the date of this Submission to Planning Authority Notice until the date it is paid to TasWater.
20. Prior to TasWater issuing a Certificate(s) for Certifiable Work (Building) and/or (Plumbing), the applicant or landowner as the case may be, must pay a developer charge totalling $2,486.16 to TasWater for sewerage infrastructure for 1.415 additional Equivalent Tenements, indexed by the Consumer Price Index All groups (Hobart) from the date of this Submission to Planning Authority Notice until the date it is paid to TasWater.

**DEVELOPMENT ASSESSMENT FEES**

21. The applicant or landowner as the case may be, must pay a development assessment fee of $389.86, to TasWater, as approved by the Economic Regulator and the fee will be indexed, until the date paid to TasWater.

    The payment is required within 30 days of the issue of an invoice by TasWater.

**Advice**

**General**

For information on TasWater development standards, please visit https://www.taswater.com.au/building-and-development/technical-standards

For application forms please visit https://www.taswater.com.au/building-and-development/development-application-form

**Trade Waste**

Prior to any Building and/or Plumbing work being undertaken, the applicant will require a Certificate for Certifiable Work (Building and/or Plumbing). The Certificate for Certifiable Work (Building and/or Plumbing) must accompany all documentation submitted to Council. Documentation must include a floor and site plan with:

- Location of all pre-treatment devices
- Schematic drawings and specification (including the size and type) of any proposed pre-treatment device and drainage design; and
- Location of an accessible sampling point in accordance with the TasWater Trade Waste specifications for sampling discharge.

At the time of submitting the Certificate for Certifiable Work (Building and/or Plumbing) a Trade Waste Application together with the General Supplement form is also required.

If the nature of the business changes or the business is sold, TasWater is required to be informed in order to review the pre-treatment assessment.

The application forms are available at http://www.taswater.com.au/Customers/Liquid-Trade-Waste/Commercial.

**Developer Charges**

For information on Developer Charges please visit the following webpage - https://www.taswater.com.au/building-and-development/developer-charges

**Service Locations**

Please note that the developer is responsible for arranging to locate the existing TasWater infrastructure and clearly showing it on the drawings. Existing TasWater infrastructure may be located by a surveyor and/or a private contractor engaged at the developers cost to locate the infrastructure.

(a) A permit is required to work within TasWater's easements or in the vicinity of its infrastructure. Further information can be obtained from TasWater.

(b) TasWater has listed a number of service providers who can provide asset detection and location services should you require it. Visit https://www.taswater.com.au/building-and-development/service-locations for a list of companies.

(c) Sewer drainage plans or Inspection Openings (IO) for residential properties are available from your local council.

**Declaration**

The drawings/documents and conditions stated above constitute TasWater's Submission to Planning Authority Notice.

| TasWater Contact Details | | | |
|---|---|---|---|
| Phone | 13 6992 | Email | development@taswater.com.au |
| Mail | GPO Box 1393 Hobart TAS 7001 | Web | www.taswater.com.au |