Application for Planning Approval

Land Use Planning and Approvals Act 1993

APPLICATION NO.

DA2022/095

LOCATION OF AFFECTED AREA

6-7 LETITIA GROVE, BRIDGEWATER

DESCRIPTION OF DEVELOPMENT PROPOSAL

COMMUNITY MEETING & ENTERTAINMENT (CULTURAL FACILITY)

A COPY OF THE DEVELOPMENT APPLICATION MAY BE VIEWED AT www.brighton.tas.gov.au AND AT THE COUNCIL OFFICES, 1 TIVOLI ROAD, OLD BEACH, BETWEEN 8:15 A.M. AND 4:45 P.M., MONDAY TO FRIDAY OR VIA THE QR CODE BELOW. ANY PERSON MAY MAKE WRITTEN REPRESENTATIONS CONCERNING AN APPLICATION UNTIL 4:45 P.M. ON **04/12/2023**. ADDRESSED TO THE GENERAL MANAGER AT 1 TIVOLI ROAD, OLD BEACH, 7017 OR BY EMAIL AT development@brighton.tas.gov.au.
REPRESENTATIONS SHOULD INCLUDE A DAYTIME TELEPHONE NUMBER TO ALLOW COUNCIL OFFICERS TO DISCUSS, IF NECESSARY, ANY MATTERS RAISED.

JAMES DRYBURGH
General Manager

SCAN ME

Brighton going places

urban space designers

Building Design And Drafting

DEVELOPMENT APPLICATION

To
Planning Officer,
Brighton City Council

Re: Proposed Addition of Hall & Toilet Block

Subject Site Address: 6-7 Letitia Grove, Bridgewater, Tasmania

REMARK PLAN

LOCATION: No. 6 - 7 LETITIA GROVE
BRIDGEWATER

OWNER: HINDU SOCIETY OF TASMANIA

SCALE: 1:250 @ A3 LENGTHS IN METRES

Nick Griggs & Co.
Land Surveyors, 295 Elizabeth Street, North Hobart 7000
Phone: 6234 5022 Fax: 6231 2412

SURVEYORS REF NO:	TITLE REFERENCE:	DATE:
4184/01	CT.40199/5 & 6	08/08/2016

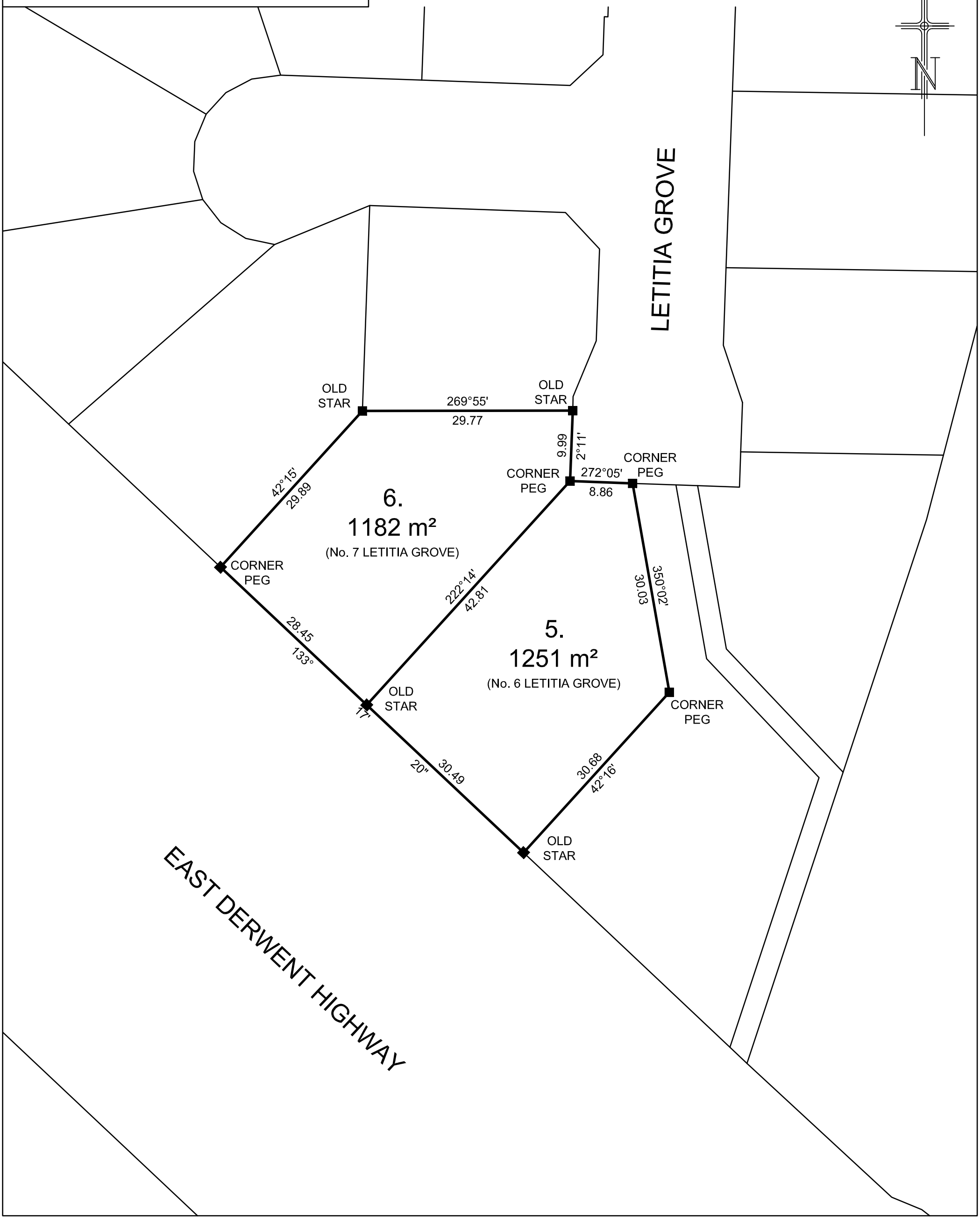

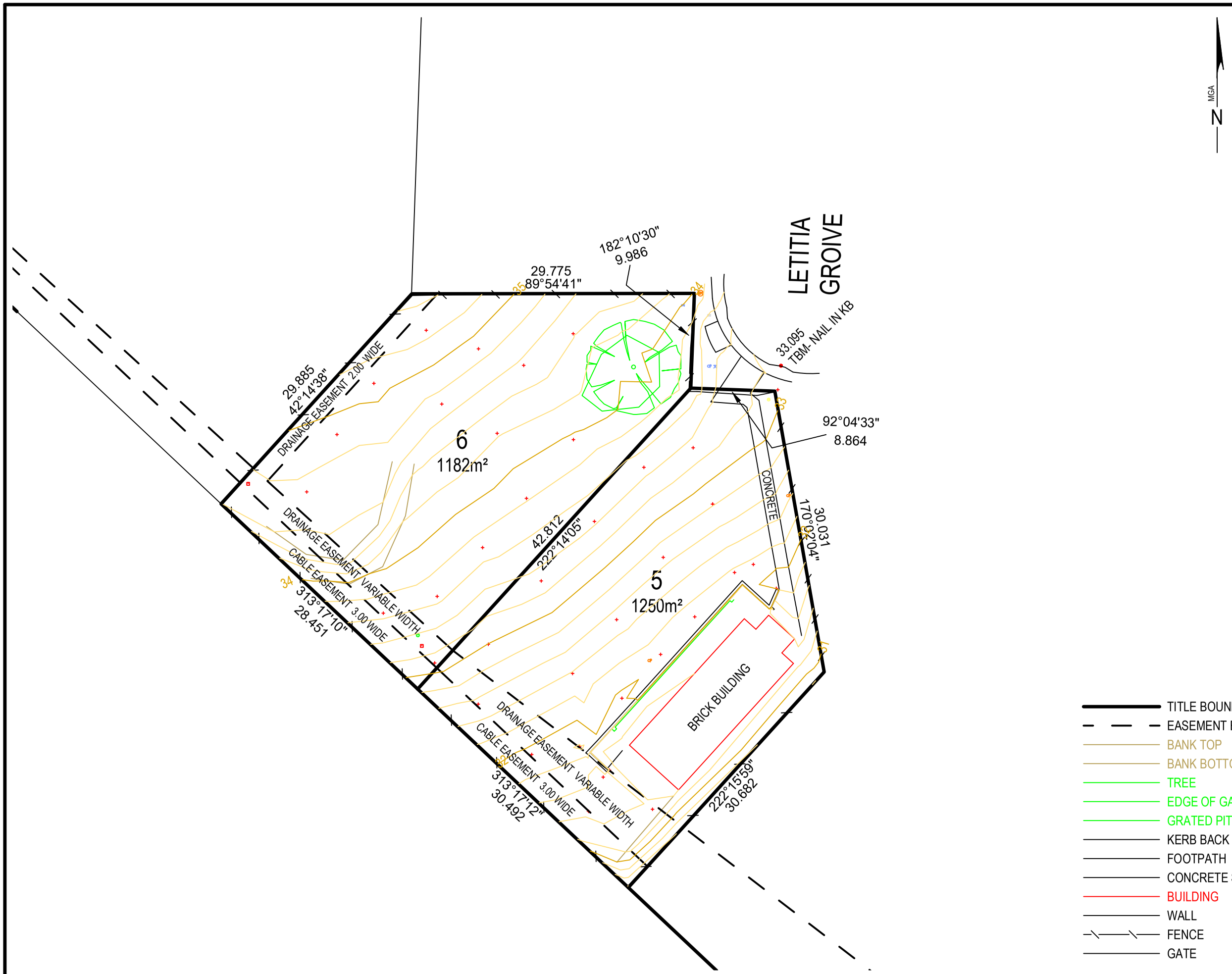

NOTES:

While all reasonable effort has been made to locate all visible above ground services, there may be other services which were not located during the field survey.

The title boundaries as shown on this plan were not marked at the time of the survey and have been determined by existing title dimensions and occupation (where available) only and not by field survey, and as a result are considered approximate only. This plan should not be used for building to boundary. or to prescribed set-backs, without further survey.

Prior to any demolition, excavation, final design or construction on this site, a full site inspection should be completed by the relevant engineers.

All survey data is 3D. The level (z-value) of any specific feature can be interrogated with a suitable CAD package. Spot heights of all features, including pipe inverts, are included in the model space but are not displayed on the PDF. Spot heights are organised into appropriate layers, and can be displayed as required.

DATUM - Vertical : AHD per RTK GPS observations on 23/07/2020

At the time of this survey, CT.40199 / 5 & 6 were owned by HINDU SOCIETY OF TASMANIA INCORPORATED

Date of Survey : 23/07/2020

TITLE BOUNDARY
EASEMENT BOUNDARY
BANK TOP
BANK BOTTOM
TREE
EDGE OF GARDEN
GRATED PIT
KERB BACK
FOOTPATH
CONCRETE SLAB
BUILDING
WALL
FENCE
GATE

NAIL
NATURAL SURFACE
TREE
STORMWATER MANHOLE
ELECTRICITY MAIN
POLE WITH LIGHT
COMMUNICATIONS PIT
METER GAS
SEWER MANHOLE
STOP VALVE
FIRE PLUG
METER WATER

AMENDMENTS

No.	Revision/Issue	Date

LEARYCOX&CRIPPS
LAND & ENGINEERING SURVEYORS
Unit G04 40 Molle Street,
HOBART TAS 7000
P 03 6118 2030
E admin@learyandcox.com

Project Name and Address
6 - 7 LETITIA GROVE
BRIDGEWATER

Drawing Title
DETAIL PLAN

Client
HINDU SOCIETY OF TASMANIA
INCORPORATED
CT's. 40199 / 5 & 6

SCALE
0 5 10 15
1:400 at A3

"THIS DOCUMENT IS, AND SHALL REMAIN, THE PROPERTY OF LEARY, COX & CRIPPS, LAND & ENGINEERING SURVEYORS. THE DOCUMENT MAY ONLY BE USED FOR THE PURPOSE FOR WHICH IT WAS COMMISSIONED AND IN ACCORDANCE WITH THE TERMS OF ENGAGEMENT FOR THE COMMISSION. UNAUTHORISED USE OF THE DOCUMENT IN ANY WAY IS PROHIBITED."

Contour Interval 0.20 m
Date 23 / 07 / 2020
SHEET 1 of 1
DRAWN ML
CHK'D ML

FILE REF: 11605
Geo/vil Ref 1160501-Detail
AutoCAD Ref 1160501-Detail
DATUM Horz: MGA
Vert: AHD

PROJECT TITLE : PROPOSED ADDITION OF HALL & TOILET BLOCK AT EXISTING CULTURAL CENTER

NOTE

In accordance with Planning Clauses

Currently Proposed Lot falls under General Business Zone Local Area Objectives

Planning Permit for the existing hall is issued and built.

Site plan at a scale of 1:250. The site plan showing all buildings, boundaries, easements, driveways, boundary setbacks, setback from a shared driveway and outdoor space.

There is no new fence proposed crossing easement

The location of Sewer Main and water is located on the plans by referring Land Survey drawing prepared by Surveyor Leary and cox. Detail Survey Drawing also attached with the Development Application for reference

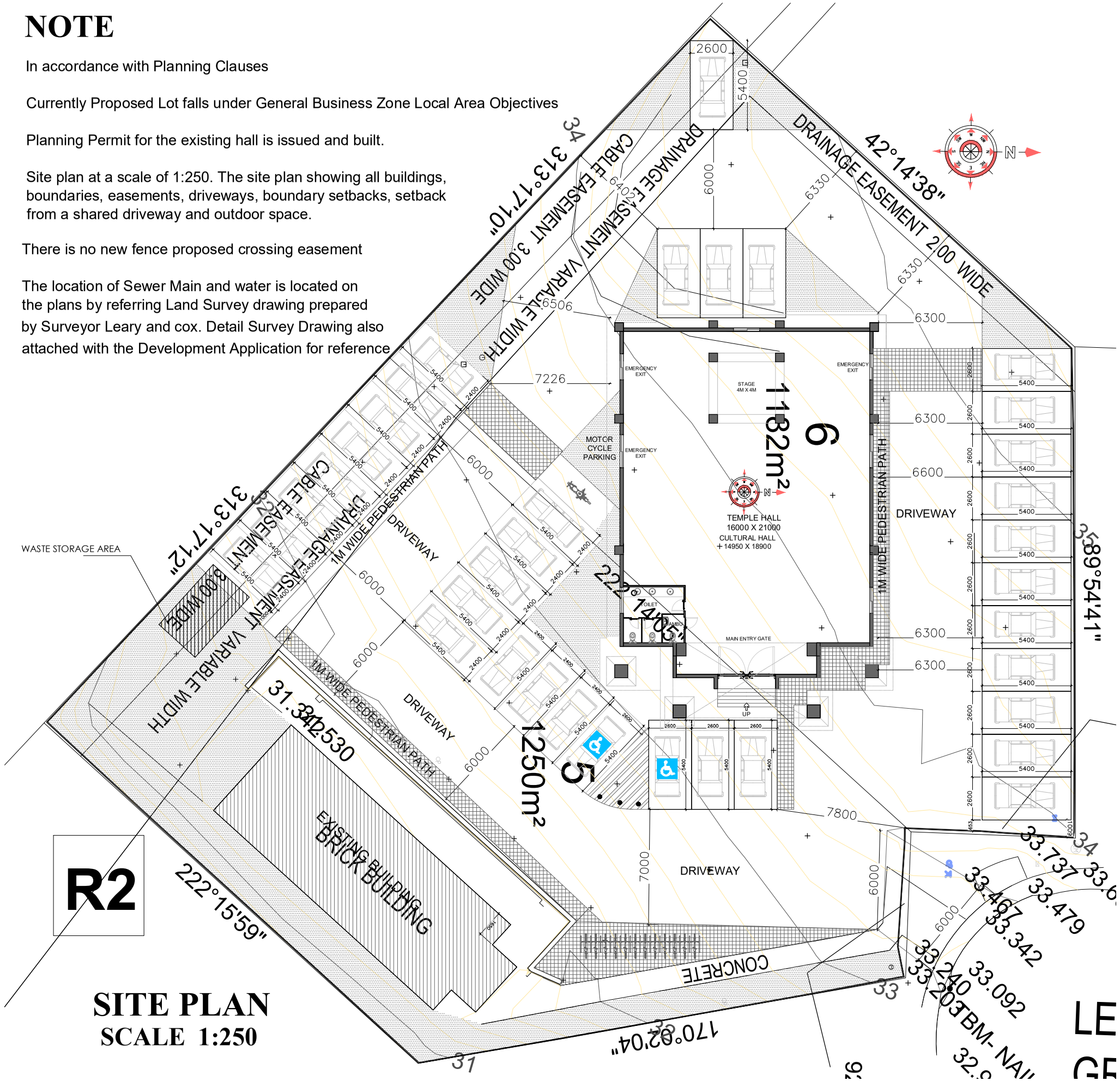

DEVELOPMENT APPLICATION

15.3 Use Standards

15.3.1, uses do not cause an unreasonable loss of amenity to residential zones.

15.4 Development Standards for Buildings and Works
15.4.1 Building height

Building Height: (a) is compatible with the streetscape; and (b) does not cause an unreasonable loss of amenity to adjoining residential zones.

15.4.2 Setbacks

Building setback: (a) is compatible with the streetscape; (b) does not cause an unreasonable loss of residential amenity to adjoining residential zones;
and (c) minimises opportunities for crime and anti-social behaviour through setback of buildings.

15.4.3 Design

The Building façades promote and maintain high levels of pedestrian interaction, amenity, and safety and are compatible with the streetscape.

15.4.3 Design

The Building façades promote and maintain high levels of pedestrian interaction, amenity, and safety and are compatible with the streetscape.

PARKING

9 car parking spaces were provided in the original planning permit and with new proposed development the number is increased from 9 to 24 car lots along with space for bicycle parking.

DRAWING LIST		
SNO.	DRAWING TITLE	NUMBER
1	SITE PLAN WITH CONTOURS	DA-01
2	ROOF PLAN	DA-02
3	SERVICE PLAN	DA-03
4	LAYOUT PLAN HALL	DA-04
5	ELEVATION	DA-05
5A	ELEVATION	DA-05A
6	ELEVATION	DA-06
7	ELEVATION	DA-07
8	ELEVATION	DA-08

DATE : 20-04-2022

Client: HSOT

Site Address:
6 LETITIA GROVE, BRIDGEWATERS

GENERAL NOTES:
CHECK ALL DIMENSIONS AND MEASUREMENTS ON SITE PRIOR TO FABRICATION AND OR CONSTRUCTION. DIMENSIONS ARE IN MILLIMETERS "FRAME TO FRAME" AND DO NOT ALLOW FOR INTERIOR LININGS.

DO NOT SCALE DRAWINGS. IF IN DOUBT ASK.

ALL WORK IN ACCORDANCE WITH THE BUILDING CODE OF AUSTRALIA (BCA) AS AMENDED, RELEVANT AUSTRALIAN STANDARDS (AS) CODES AND GOOD BUILDING PRACTICES. DRAWINGS TO BE READ IN CONJUNCTION WITH SPECIFICATIONS AND SCHEDULES.

ISSUE	DESCRIPTION	DATE
R1	UPDATED PARKING LAYOUT	16/06/22
R2	UPDATED PARKING LAYOUT & BLDG AREA	10/10/22

File Number: HSOT/ARCH/200422

Title: SITE PLAN WITH CONTOURS

Sheet Original: A - 3

SCALE 1:250

urban space designers
Building Design And Drafting
20/4 CLIFFORD COURT
HOWRAH 7018

HEMANT KHANNA
0402438170
info@urbanspacedesigners.com.au

Drawn By: GAGANDEEP KAUR

Drawing Number: DA-01

PLOT DATE 20-04-2022

01	PROJECT TEAM	ENGINEER:	ENERGY RATING:	SOIL REPORT:	Land Surveyor: LEARYCOX & CRIPPS ph: 0361182030	Contact: MATTHEW m: 0437364170

THIS DOCUMENT HAS BEEN PREPARED BY & IS THE PROPERTY OF URBAN SPACE DESIGNERS - LICENCED BUILDING DESIGNERS AND MAY ONLY BE USED FOR THE PURPOSE FOR WHICH IT WAS COMMISSIONED. copyright

PROJECT TITLE : PROPOSED ADDITION OF HALL & TOILET BLOCK AT EXISTING CULTURAL CENTER

NOTE

In accordance with Planning Clauses

Currently Proposed Lot fall under General Business Zone Local Area Objectives

Planning Permit for the existing hall is in place and built.

Site plan at a scale of 1:250. The site plan showing all buildings, boundaries, easements, driveways, boundary setbacks, setback from a shared driveway and outdoor space.

There is no new fence proposed crossing easement

The location of Sewer Main and water is located on the plans by referring Land Survey drawing prepared by Surveyor Leary and cox. Detail Survey Drawing also attached with the Development Application for reference

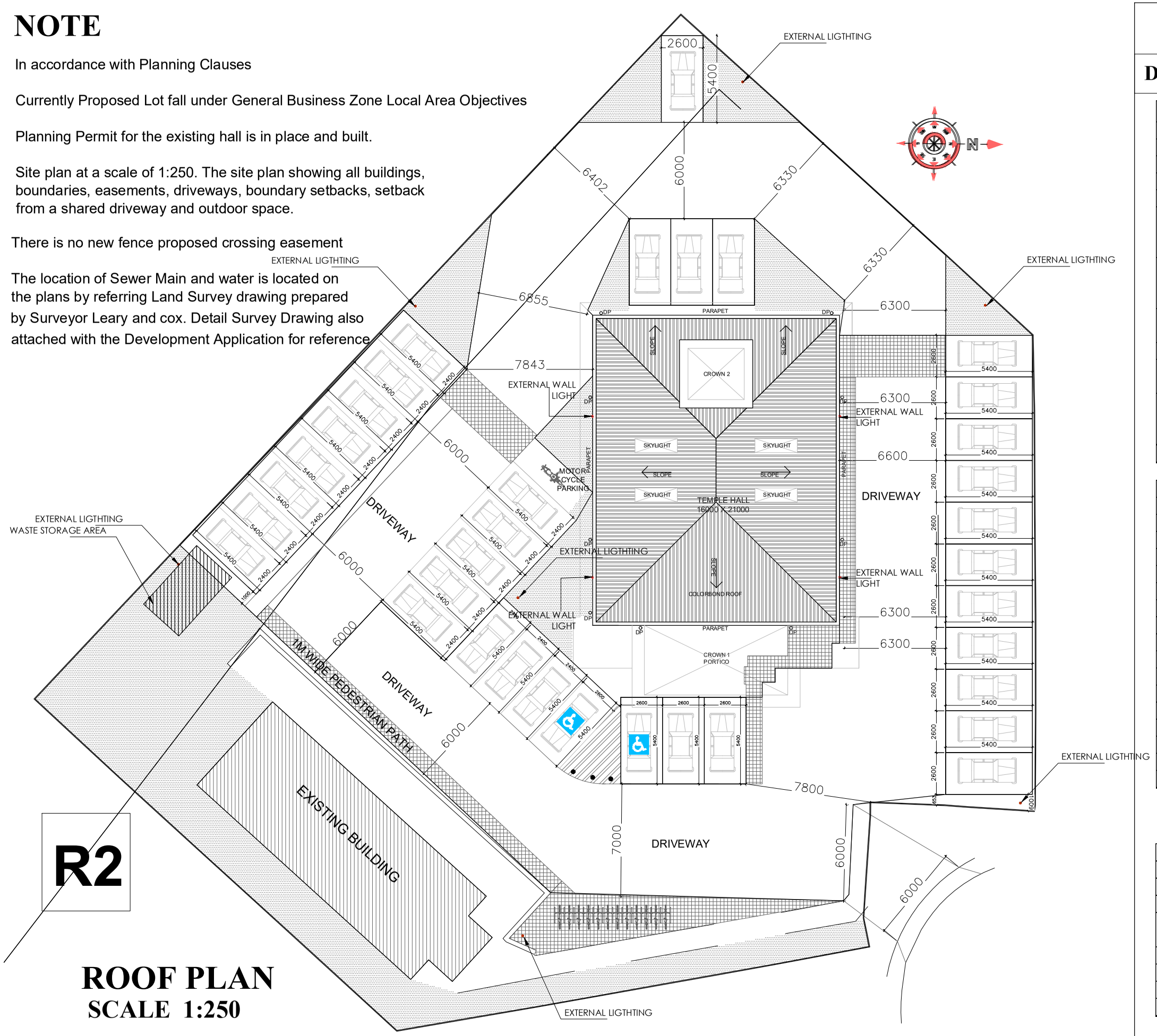

R2

ROOF PLAN
SCALE 1:250

DEVELOPMENT APPLICATION

Sno.	Description	AREA SQM.
1	SITE AREA	2432
2	GREEN AREA	424.1
3	BLDG FOOT PRINT AREA	
	EXISTING (COMMUNITY CENTER + PORCH) (126 + 7.4)	133.4
	PROPOSED CULTURAL HALL INCLUDING PORCH	316.5
	TOTAL GROUND COVER (BUILDING FOOT PRINT)	449.9
4	GRAVEL AREA (DRIVEWAYS & PARKING LOTS)	985
5	CONCRETE AREA (DRIVEWAYS AND PARKING LOT)	573

DEVELOPMENT SUMMARY		
SNO.	ITEM DESCRIPTION	AREA SQM.
	LOT AREA	2432.00
	GROUND COVER	449.9
	GREEN AREA	424.10
1	IMPERVIOUS SURFACE	
	BUILDING GRD COVER	449.9
	CONCRETE/DRIVEWAY	573.00
	TOTAL IMPERVIOUS SURFACE	1022.9
	PERCENTAGE %	42.06
2	PERVIOUS SURFACE	
	GREEN AREA	424.1
	Gravel Area	985
	TOTAL PERVIOUS SURFACE	1409.1
	PERCENTAGE %	57.94

DESIGN COMPONENTS		
SNO.	ITEM DESCRIPTION	AREA SQM.
PROPOSED CULTURAL HALL		316.5
	Proposed Hall including porch	
EXISTING		133.4
	Existing Hall including porch	

DATE : 07-03-2022

Client: HSOT

Site Address: 6 LETITIA GROVE, BRIDGEWATERS

GENERAL NOTES:
CHECK ALL DIMENSIONS AND MEASUREMENTS ON SITE PRIOR TO FABRICATION AND OR CONSTRUCTION. DIMENSIONS ARE IN MILLIMETERS "FRAME TO FRAME" AND DO NOT ALLOW FOR INTERIOR LININGS.

DO NOT SCALE DRAWINGS. IF IN DOUBT ASK.

ALL WORK IN ACCORDANCE WITH THE BUILDING CODE OF AUSTRALIA (BCA) AS AMENDED, RELEVANT AUSTRALIAN STANDARDS (AS) CODES AND GOOD BUILDING PRACTICES. DRAWINGS TO BE READ IN CONJUNCTION WITH SPECIFICATIONS AND SCHEDULES.

ISSUE	DESCRIPTION	DATE
R1	UPDATED PARKING LAYOUT	16/06/22
R2	UPDATED PARKING LAYOUT & BLDG AREA	10/10/22

File Number: HSOT/ARCH/200422

Title: ROOF PLAN

Sheet Original: A - 3

SCALE 1:250

urban space designers
Building Design And Drafting
20/4 CLIFFORD COURT
HOWRAH 7018

HEMANT KHANNA
0402438170
info@urbanspacedesigners.com.au

Drawn By: GAGANDEEP KAUR

Drawing Number: DA-02

PLOT DATE 20-04-2022

02

PROJECT TEAM	ENGINEER:	ENERGY RATING:	SOIL REPORT:	Land Surveyor: LEARYCOX & CRIPPS ph: 0361182030	Contact: MATTHEW m: 0437364170

THIS DOCUMENT HAS BEEN PREPARED BY & IS THE PROPERTY OF URBAN SPACE DESIGNERS - LICENCED BUILDING DESIGNERS AND MAY ONLY BE USED FOR THE PURPOSE FOR WHICH IT WAS COMMISSIONED. copyright

PROJECT TITLE : PROPOSED ADDITION OF HALL & TOILET BLOCK AT EXISTING CULTURAL CENTER

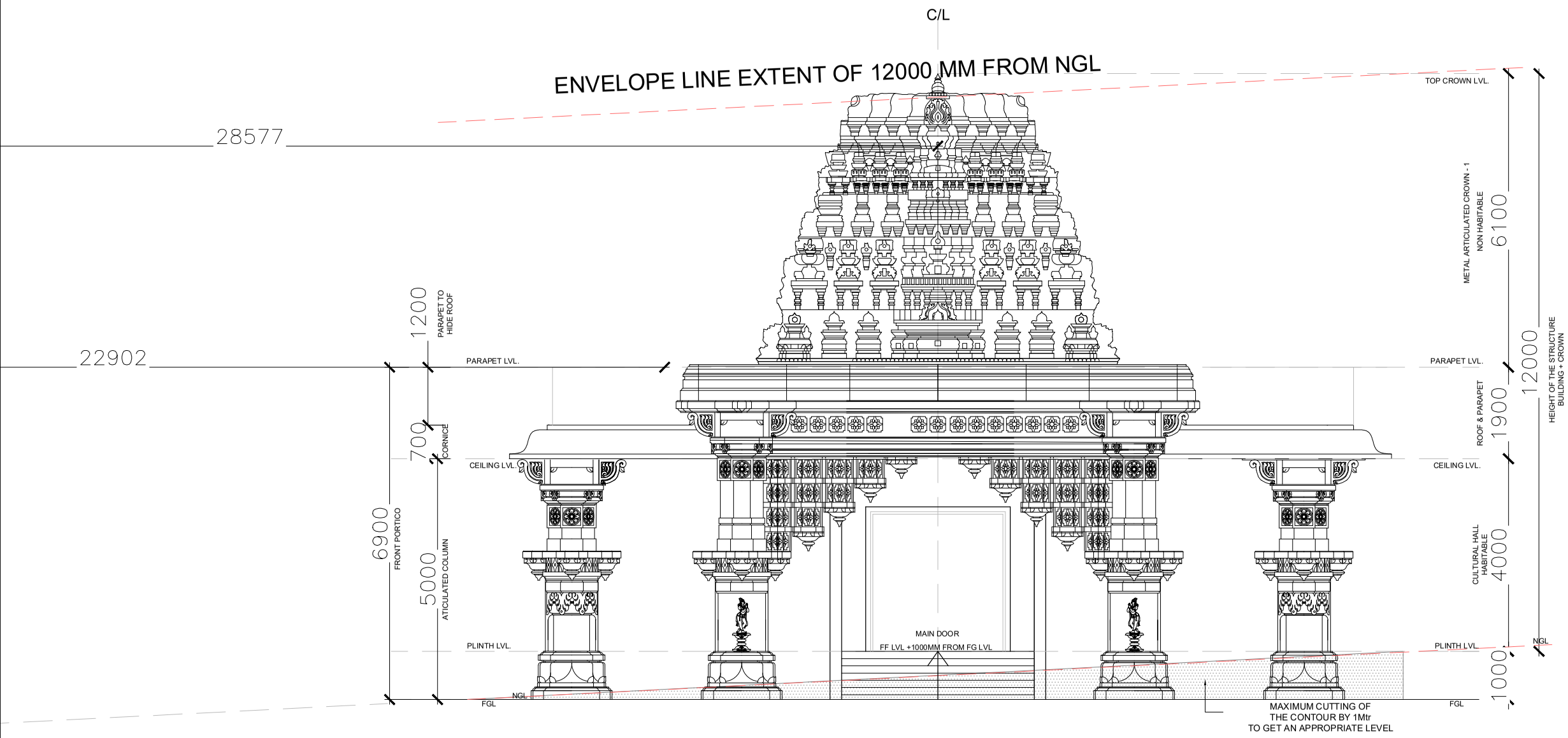

FRONT / EAST ELEVATION
CULTURAL HALL

R2

NOTES

1. **Low Reflective windows to be provided in accordance with clause GLE - S7.7.1.2 A1**
2. **Glazings and Frames to BCA part 3.6 AS2047 & AS1288**
3. **Double Glazed Low - e Glazings with standard A1 frames. (U - value 3.7 max, SHGC 0.60 approx.)**
4. **OG - Window Obscure Glass with a uniform transparency of 25%, in accordance with requirements of Interim Planning Scheme 2015.**

SCALE 1:125

DEVELOPMENT APPLICATION

NOTE: -

1) The information contained in this document is copyright and may not be used or reproduced for any other project or purpose. Verify all dimensions and levels on site and report any discrepencies to URBAN SPACE DESIGNERS for direction prior to the commencement of work. Drawings to be read in conjunction with all other contract documents. Use figured dimensions only. Do not scale from drawings. URBAN SPACE DESIGNERS cannot guarantee the acuracy of contentand format for copies of drawings issued electronically. If in doubt ask.The completion of the issued details checked and authorized section below is confirmation of the status of the drawing. The drawing shall not be used for the construction unless endorsed "for construction" and authorized for issue.
2) Read these drawings in conjunctions with drawings prepared by Urban space designers. Refer any discrepencies with the designer before proceeding with any building works.

05	PROJECT TEAM	ENGINEER:	ENERGY RATING:	SOIL REPORT:	Land Surveyor: LEARYCOX & CRIPPS ph: 0361182030	Contact: MATTHEW m: 0437364170

THIS DOCUMENT HAS BEEN PREPARED BY & IS THE PROPERTY OF URBAN SPACE DESIGNERS - LICENCED BUILDING DESIGNERS AND MAY ONLY BE USED FOR THE PURPOSE FOR WHICH IT WAS COMMISSIONED. copyright ©

DATE : 07-03-2022

Client: HSOT

Site Address:

6 LETITIA GROVE, BRIDGEWATERS

GENERAL NOTES:

CHECK ALL DIMENSIONS AND MEASUREMENTS ON SITE PRIOR TO FABRICATION AND OR CONSTRUCTION. DIMENSIONS ARE IN MILLIMETERS "FRAME TO FRAME" AND DO NOT ALLOW FOR INTERIOR LININGS.

DO NOT SCALE DRAWINGS. **IF IN DOUBT ASK.**

ALL WORK IN ACCORDANCE WITH THE BUILDING CODE OF AUSTRALIA (BCA) AS AMENDED, RELEVANT AUSTRALIAN STANDARDS (AS) CODES AND GOOD BUILDING PRACTICES. DRAWINGS TO BE READ IN CONJUNCTION WITH SPECIFICATIONS AND SCHEDULES.

ISSUE	DESCRIPTION	DATE
R1	The site is excavated by maximim of 1 mtr from the highest point of NGL to accommodate the permissible height of 12 Mtr	16/06/22
R2	UPDATED PARKING LAYOUT & BLDG AREA	10/10/22

File Number: HSOT/ARCH/200422

Title: ELEVATION

Sheet Original: A - 3

SCALE 1:125

urban space designers
Building Design And Drafting
20/4 CLIFFORD COURT
HOWRAH 7018
HEMANT KHANNA
0402438170
info@urbanspacedesigners.com.au

Drawn By: GAGANDEEP KAUR

Drawing Number: DA-05

PLOT DATE 20-04-2022

PROJECT TITLE : PROPOSED ADDITION OF HALL & TOILET BLOCK AT EXISTING CULTURAL CENTER

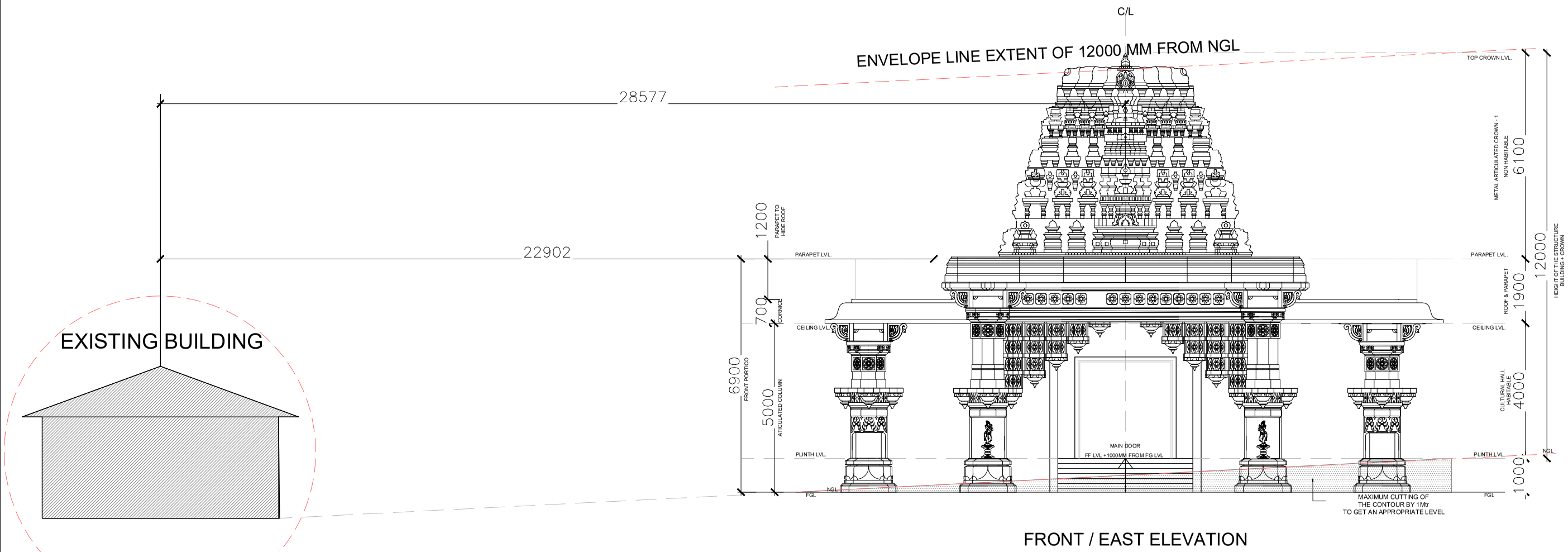

FRONT / EAST ELEVATION

FRONT / EAST ELEVATION
CULTURAL HALL

NOTES

1. **Low Reflective windows to be provided in accordance with clause GLE - S7.7.1.2 A1**
2. **Glazings and Frames to BCA part 3.6 AS2047 & AS1288**
3. **Double Glazed Low - e Glazings with standard A1 frames. (U - value 3.7 max, SHGC 0.60 approx.)**
4. **OG - Window Obscure Glass with a uniform transparency of 25%, in accordance with requirements of Interim Planning Scheme 2015.**

SCALE 1:125

DEVELOPMENT APPLICATION

NOTE: -

1) The information contained in this document is copyright and may not be used or reproduced for any other project or purpose. Verify all dimensions and levels on site and report any discrepencies to URBAN SPACE DESIGNERS for direction prior to the commencement of work. Drawings to be read in conjunction with all other contract documents. Use figured dimensions only. Do not scale from drawings. URBAN SPACE DESIGNERS cannot guarantee the acuracy of contentand format for copies of drawings issued electronically. If in doubt ask.The completion of the issued details checked and authorized section below is confirmation of the status of the drawing. The drawing shall not be used for the construction unless endorsed "for construction" and authorized for issue.
2) Read these drawings in conjunctions with drawings prepared by Urban space designers. Refer any discrepencies with the designer before proceeding with any building works.

05a

PROJECT TEAM	ENGINEER:	ENERGY RATING:	SOIL REPORT:	Land Surveyor: LEARYCOX & CRIPPS ph: 0361182030	Contact: MATTHEW m: 0437364170

THIS DOCUMENT HAS BEEN PREPARED BY & IS THE PROPERTY OF URBAN SPACE DESIGNERS - LICENCED BUILDING DESIGNERS AND MAY ONLY BE USED FOR THE PURPOSE FOR WHICH IT WAS COMMISSIONED. copyright ©

DATE : 16-06-2022

Client:
HSOT

Site Address:
6 LETITIA GROVE, BRIDGEWATERS

GENERAL NOTES:

CHECK ALL DIMENSIONS AND MEASUREMENTS ON SITE PRIOR TO FABRICATION AND OR CONSTRUCTION. DIMENSIONS ARE IN MILLIMETERS "FRAME TO FRAME" AND DO NOT ALLOW FOR INTERIOR LININGS.

DO NOT SCALE DRAWINGS. **IF IN DOUBT ASK.**

ALL WORK IN ACCORDANCE WITH THE BUILDING CODE OF AUSTRALIA (BCA) AS AMENDED, RELEVANT AUSTRALIAN STANDARDS (AS) CODES AND GOOD BUILDING PRACTICES. DRAWINGS TO BE READ IN CONJUNCTION WITH SPECIFICATIONS AND SCHEDULES.

ISSUE	DESCRIPTION	DATE

File Number:
HSOT/ARCH/200422

Title:
ELEVATION

Sheet Original:
A - 3

SCALE 1:125

urban space designers
Building Design And Drafting
20/4 CLIFFORD COURT
HOWRAH 7018

HEMANT KHANNA
0402438170
info@urbanspacedesigners.com.au

Drawn By:
GAGANDEEP KAUR

Drawing Number:
DA-05a

PLOT DATE
16-06-2022

PROJECT TITLE : PROPOSED ADDITION OF HALL & TOILET BLOCK AT EXISTING CULTURAL CENTER

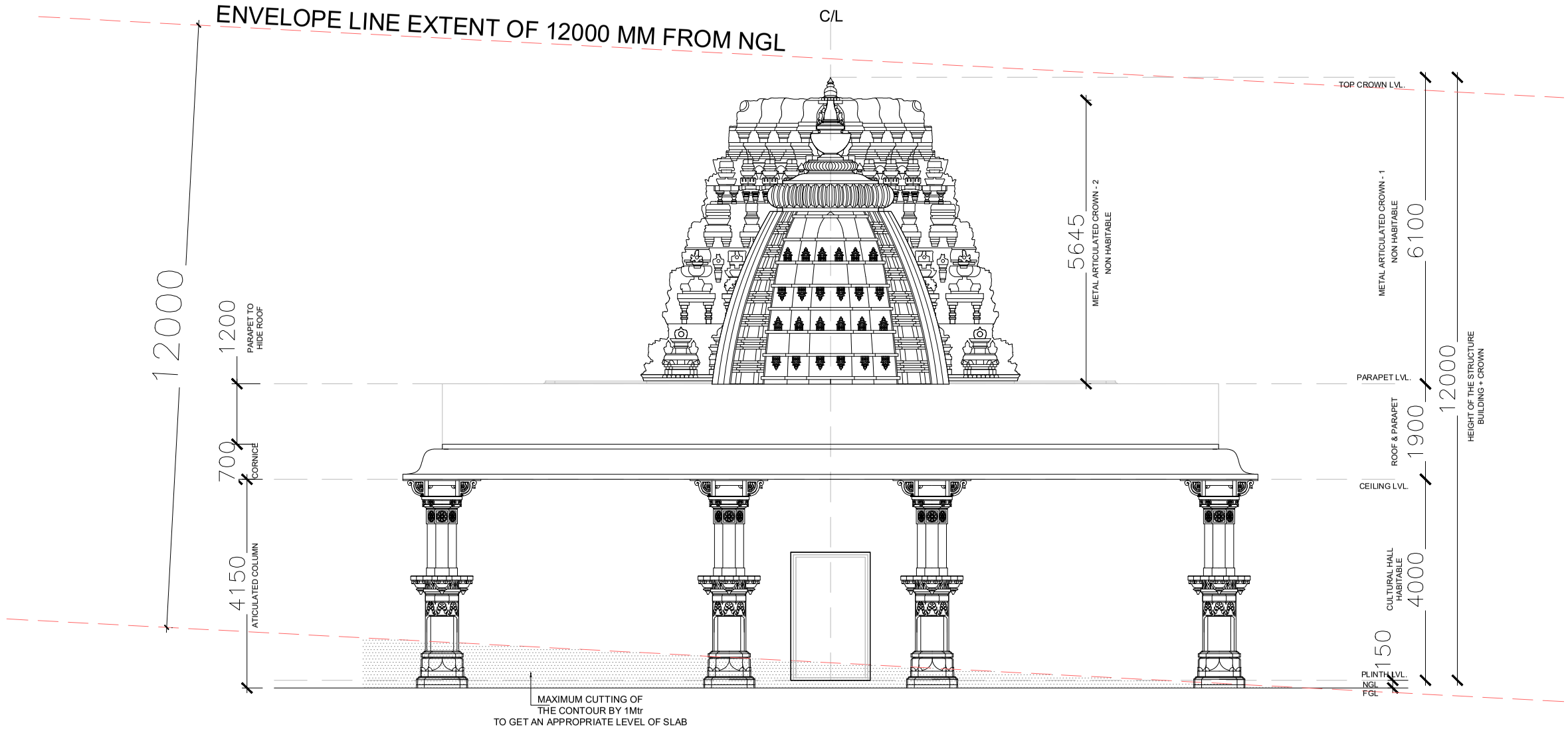

REAR / WEST ELEVATION
CULTURAL HALL

R2

NOTES

1. **Low Reflective windows to be provided in accordance with clause GLE - S7.7.1.2 A1**
2. **Glazings and Frames to BCA part 3.6 AS2047 & AS1288**
3. **Double Glazed Low - e Glazings with standard A1 frames. (U - value 3.7 max, SHGC 0.60 approx.)**
4. **OG - Window Obscure Glass with a uniform transparency of 25%, in accordance with requirements of Interim Planning Scheme 2015.**

SCALE 1:100

DEVELOPMENT APPLICATION

NOTE: -

1) The information contained in this document is copyright and may not be used or reproduced for any other project or purpose. Verify all dimensions and levels on site and report any discrepencies to URBAN SPACE DESIGNERS for direction prior to the commencement of work. Drawings to be read in conjunction with all other contract documents. Use figured dimensions only. Do not scale from drawings. URBAN SPACE DESIGNERS cannot guarantee the acuracy of contentand format for copies of drawings issued electronically. If in doubt ask.The completion of the issued details checked and authorized section below is confirmation of the status of the drawing. The drawing shall not be used for the construction unless endorsed "for construction" and authorized for issue.
2) Read these drawings in conjunctions with drawings prepared by Urban space designers. Refer any discrepencies with the designer before proceeding with any building works.

06	PROJECT TEAM	ENGINEER:	ENERGY RATING:	SOIL REPORT:	Land Surveyor: LEARYCOX & CRIPPS ph: 0361182030	Contact: MATTHEW m: 0437364170

THIS DOCUMENT HAS BEEN PREPARED BY & IS THE PROPERTY OF URBAN SPACE DESIGNERS - LICENCED BUILDING DESIGNERS AND MAY ONLY BE USED FOR THE PURPOSE FOR WHICH IT WAS COMMISSIONED. copyright

DATE : 07-03-2022

Client:
HSOT

Site Address:
6 LETITIA GROVE, BRIDGEWATERS

GENERAL NOTES:

CHECK ALL DIMENSIONS AND MEASUREMENTS ON SITE PRIOR TO FABRICATION AND OR CONSTRUCTION. DIMENSIONS ARE IN MILLIMETERS "FRAME TO FRAME" AND DO NOT ALLOW FOR INTERIOR LININGS.

DO NOT SCALE DRAWINGS. **IF IN DOUBT ASK.**

ALL WORK IN ACCORDANCE WITH THE BUILDING CODE OF AUSTRALIA (BCA) AS AMENDED, RELEVANT AUSTRALIAN STANDARDS (AS) CODES AND GOOD BUILDING PRACTICES. DRAWINGS TO BE READ IN CONJUNCTION WITH SPECIFICATIONS AND SCHEDULES.

ISSUE	DESCRIPTION	DATE
R1	The site is excavated by maximim of 1 mtr from the highest point of NGL to accommodate the permissible height of 12 Mtr	16/06/22
R2	UPDATED PARKING LAYOUT & BLDG AREA	10/10/22

File Number:
HSOT/ARCH/200422

Title:
ELEVATION

Sheet Original:
A - 3

SCALE 1:100

urban space designers
Building Design And Drafting
20/4 CLIFFORD COURT
HOWRAH 7018

HEMANT KHANNA
0402438170
info@urbanspacedesigners.com.au

Drawn By:
GAGANDEEP KAUR

Drawing Number:
DA-06

PLOT DATE
20-04-2022

PROJECT TITLE : PROPOSED ADDITION OF HALL & TOILET BLOCK AT EXISTING CULTURAL CENTER

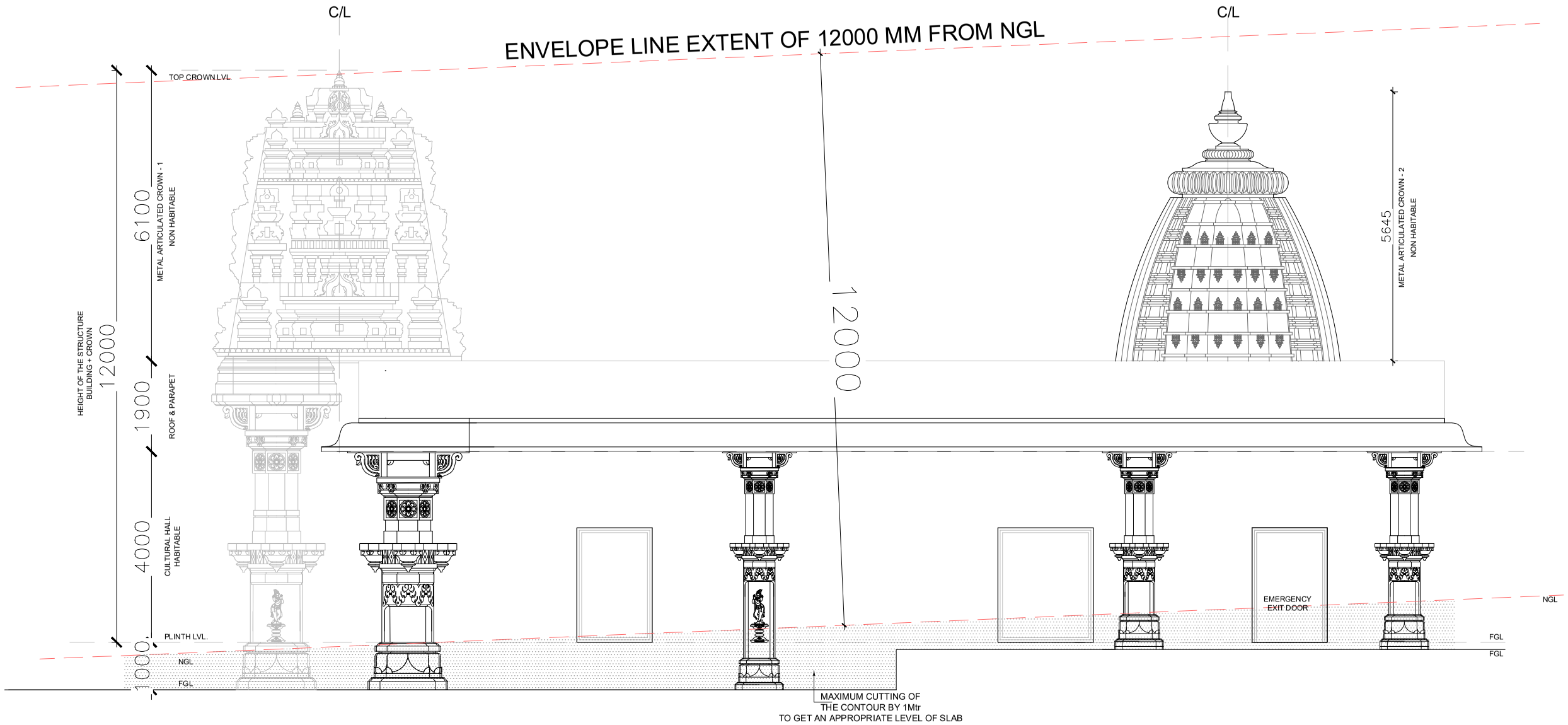

SIDE / NORTH ELEVATION
CULTURAL HALL

R2

NOTES

1. **Low Reflective windows to be provided in accordance with clause GLE - S7.7.1.2 A1**
2. **Glazings and Frames to BCA part 3.6 AS2047 & AS1288**
3. **Double Glazed Low - e Glazings with standard A1 frames. (U - value 3.7 max, SHGC 0.60 approx.)**
4. **OG - Window Obscure Glass with a uniform transparency of 25%, in accordance with requirements of Interim Planning Scheme 2015.**

SCALE 1:100

DEVELOPMENT APPLICATION

NOTE: -

1) The information contained in this document is copyright and may not be used or reproduced for any other project or purpose. Verify all dimensions and levels on site and report any discrepencies to URBAN SPACE DESIGNERS for direction prior to the commencement of work. Drawings to be read in conjunction with all other contract documents. Use figured dimensions only. Do not scale from drawings. URBAN SPACE DESIGNERS cannot guarantee the acuracy of contentand format for copies of drawings issued electronically. If in doubt ask.The completion of the issued details checked and authorized section below is confirmation of the status of the drawing. The drawing shall not be used for the construction unless endorsed "for construction" and authorized for issue.
2) Read these drawings in conjunctions with drawings prepared by Urban space designers. Refer any discrepencies with the designer before proceeding with any building works.

07	PROJECT TEAM	ENGINEER:	ENERGY RATING:	SOIL REPORT:	Land Surveyor: LEARYCOX & CRIPPS ph: 0361182030	Contact: MATTHEW m: 0437364170

THIS DOCUMENT HAS BEEN PREPARED BY & IS THE PROPERTY OF URBAN SPACE DESIGNERS - LICENCED BUILDING DESIGNERS AND MAY ONLY BE USED FOR THE PURPOSE FOR WHICH IT WAS COMMISSIONED. copyright

DATE : 07-03-2022

Client: HSOT

Site Address:

6 LETITIA GROVE, BRIDGEWATERS

GENERAL NOTES:

CHECK ALL DIMENSIONS AND MEASUREMENTS ON SITE PRIOR TO FABRICATION AND OR CONSTRUCTION. DIMENSIONS ARE IN MILLIMETERS "FRAME TO FRAME" AND DO NOT ALLOW FOR INTERIOR LININGS.

DO NOT SCALE DRAWINGS. **IF IN DOUBT ASK.**

ALL WORK IN ACCORDANCE WITH THE BUILDING CODE OF AUSTRALIA (BCA) AS AMENDED, RELEVANT AUSTRALIAN STANDARDS (AS) CODES AND GOOD BUILDING PRACTICES. DRAWINGS TO BE READ IN CONJUNCTION WITH SPECIFICATIONS AND SCHEDULES.

ISSUE	DESCRIPTION	DATE
R1	The site is excavated by maximim of 1 mtr from the highest point of NGL to accommodate the permissible height of 12 Mtr	16/06/22
R2	UPDATED PARKING LAYOUT & BLDG AREA	10/10/22

File Number: HSOT/ARCH/200422

Title: ELEVATION

Sheet Original: A - 3

SCALE 1:100

urban space designers
Building Design And Drafting
20/4 CLIFFORD COURT
HOWRAH 7018
HEMANT KHANNA
0402438170
info@urbanspacedesigners.com.au

Drawn By: GAGANDEEP KAUR

Drawing Number: DA-07

PLOT DATE 20-04-2022

PROJECT TITLE : PROPOSED ADDITION OF HALL & TOILET BLOCK AT EXISTING CULTURAL CENTER

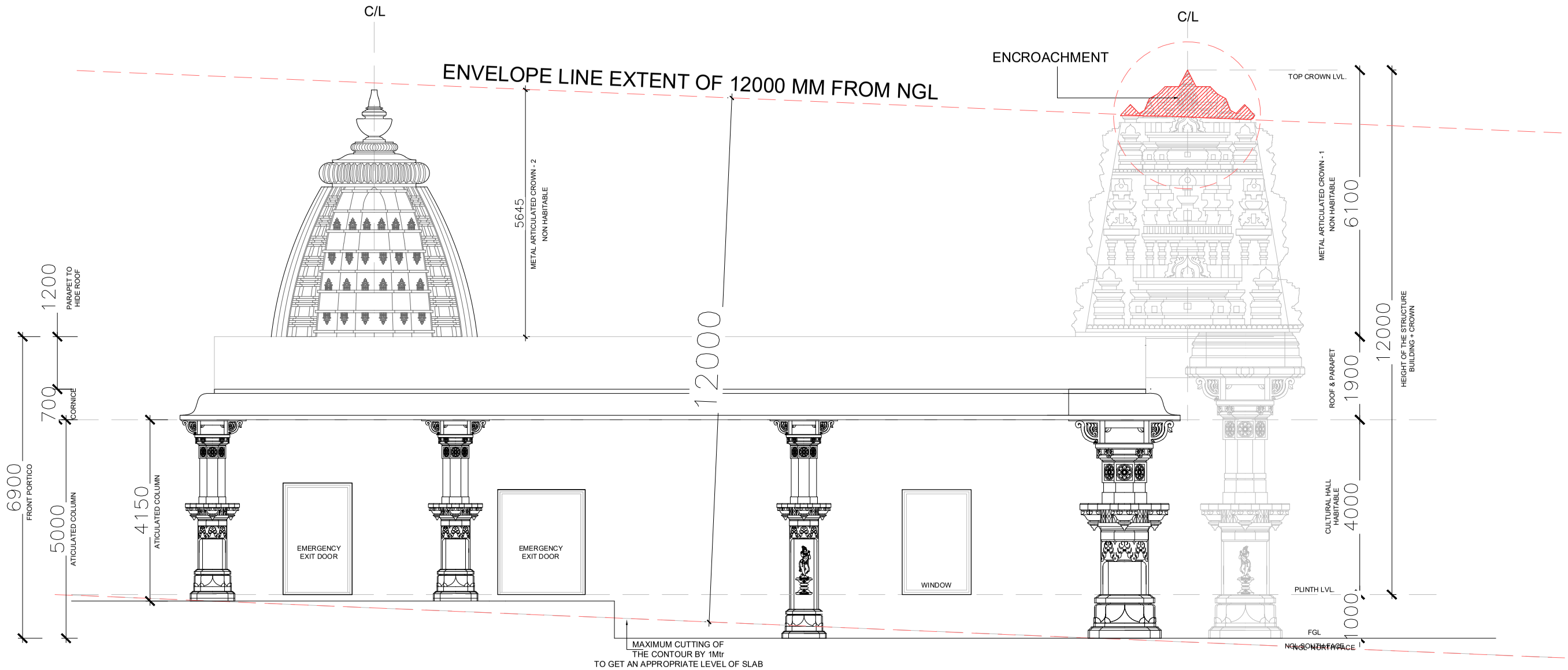

SIDE / SOUTH ELEVATION
CULTURAL HALL

R2

NOTES

1. **Low Reflective windows to be provided in accordance with clause GLE - S7.7.1.2 A1**
2. **Glazings and Frames to BCA part 3.6 AS2047 & AS1288**
3. **Double Glazed Low - e Glazings with standard A1 frames. (U - value 3.7 max, SHGC 0.60 approx.)**
4. **OG - Window Obscure Glass with a uniform transparency of 25%, in accordance with requirements of Interim Planning Scheme 2015.**

SCALE 1:100

DEVELOPMENT APPLICATION

NOTE: -

1) The information contained in this document is copyright and may not be used or reproduced for any other project or purpose. Verify all dimensions and levels on site and report any discrepencies to URBAN SPACE DESIGNERS for direction prior to the commencement of work. Drawings to be read in conjunction with all other contract documents. Use figured dimensions only. Do not scale from drawings. URBAN SPACE DESIGNERS cannot guarantee the acuracy of contentand format for copies of drawings issued electronically. If in doubt ask.The completion of the issued details checked and authorized section below is confirmation of the status of the drawing. The drawing shall not be used for the construction unless endorsed "for construction" and authorized for issue.
2) Read these drawings in conjunctions with drawings prepared by Urban space designers. Refer any discrepencies with the designer before proceeding with any building works.

08	PROJECT TEAM	ENGINEER:	ENERGY RATING:	SOIL REPORT:	Land Surveyor: LEARYCOX & CRIPPS ph: 0361182030	Contact: MATTHEW m: 0437364170

THIS DOCUMENT HAS BEEN PREPARED BY & IS THE PROPERTY OF URBAN SPACE DESIGNERS - LICENCED BUILDING DESIGNERS AND MAY ONLY BE USED FOR THE PURPOSE FOR WHICH IT WAS COMMISSIONED. copyright

DATE : 07-03-2022

Client: HSOT

Site Address:
6 LETITIA GROVE, BRIDGEWATERS

GENERAL NOTES:

CHECK ALL DIMENSIONS AND MEASUREMENTS ON SITE PRIOR TO FABRICATION AND OR CONSTRUCTION. DIMENSIONS ARE IN MILLIMETERS "FRAME TO FRAME" AND DO NOT ALLOW FOR INTERIOR LININGS.

DO NOT SCALE DRAWINGS. **IF IN DOUBT ASK.**

ALL WORK IN ACCORDANCE WITH THE BUILDING CODE OF AUSTRALIA (BCA) AS AMENDED, RELEVANT AUSTRALIAN STANDARDS (AS) CODES AND GOOD BUILDING PRACTICES. DRAWINGS TO BE READ IN CONJUNCTION WITH SPECIFICATIONS AND SCHEDULES.

ISSUE	DESCRIPTION	DATE
R1	The site is excavated by maximim of 1 mtr from the highest point of NGL to accommodate the permissible height of 12 Mtr	16/06/22
R2	UPDATED PARKING LAYOUT & BLDG AREA	10/10/22

File Number: HSOT/ARCH/200422

Title: ELEVATION

Sheet Original: A - 3

SCALE 1:100

urban space designers
Building Design And Drafting
20/4 CLIFFORD COURT
HOWRAH 7018

HEMANT KHANNA
0402438170
info@urbanspacedesigners.com.au

Drawn By: GAGANDEEP KAUR

Drawing Number: DA-08

PLOT DATE 20-04-2022

PROJECT TITLE : PROPOSED ADDITION OF HALL & TOILET BLOCK AT EXISTING CULTURAL CENTER

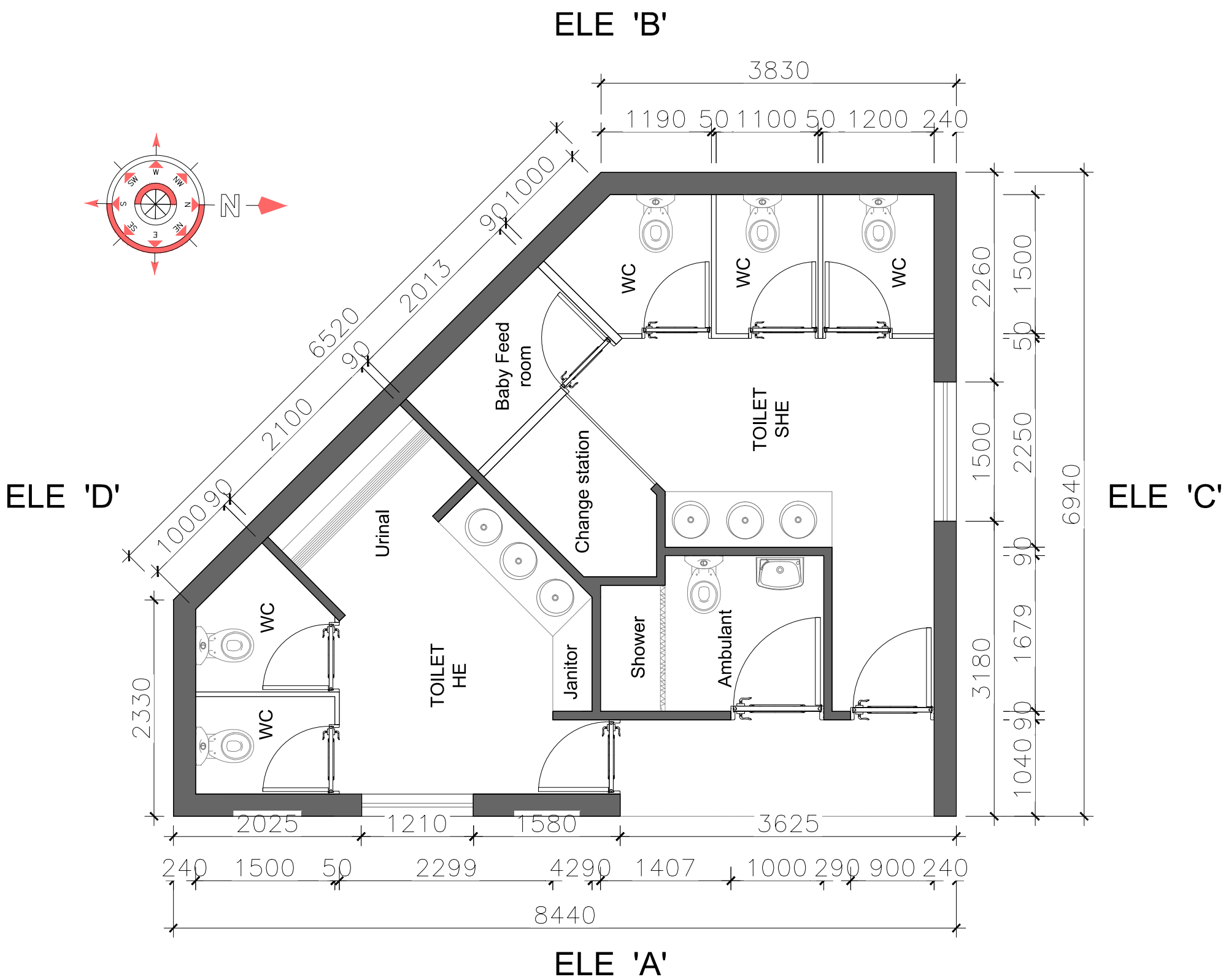

LAYOUT DIMENSIONAL PLAN

SCALE 1:50

TOILET BLOCK

DEVELOPMENT APPLICATION

NOTE: -

1) The information contained in this document is copyright and may not be used or reproduced for any other project or purpose. Verify all dimensions and levels on site and report any discrepencies to URBAN SPACE DESIGNERS for direction prior to the commencement of work. Drawings to be read in conjunction with all other contract documents. Use figured dimensions only. Do not scale from drawings. URBAN SPACE DESIGNERS cannot guarantee the acuracy of contentand format for copies of drawings issued electronically. If in doubt ask.The completion of the issued details checked and authorized section below is confirmation of the status of the drawing. The drawing shall not be used for the construction unless endorsed "for construction" and authorized for issue.
2) Read these drawings in conjunctions with drawings prepared by Urban space designers. Refer any discrepencies with the designer before proceeding with any building works.

09

PROJECT TEAM	ENGINEER:	ENERGY RATING:	SOIL REPORT:	Land Surveyor: LEARYCOX & CRIPPS ph: 0361182030	Contact: MATTHEW m: 0437364170

THIS DOCUMENT HAS BEEN PREPARED BY & IS THE PROPERTY OF URBAN SPACE DESIGNERS - LICENCED BUILDING DESIGNERS AND MAY ONLY BE USED FOR THE PURPOSE FOR WHICH IT WAS COMMISSIONED. copyright ©

DATE : 07-03-2022

Client: HSOT

Site Address:
6 LETITIA GROVE, BRIDGEWATERS

GENERAL NOTES:
CHECK ALL DIMENSIONS AND MEASUREMENTS ON SITE PRIOR TO FABRICATION AND OR CONSTRUCTION. DIMENSIONS ARE IN MILLIMETERS "FRAME TO FRAME" AND DO NOT ALLOW FOR INTERIOR LININGS.

DO NOT SCALE DRAWINGS.
IF IN DOUBT ASK.

ALL WORK IN ACCORDANCE WITH THE BUILDING CODE OF AUSTRALIA (BCA) AS AMENDED, RELEVANT AUSTRALIAN STANDARDS (AS) CODES AND GOOD BUILDING PRACTICES. DRAWINGS TO BE READ IN CONJUNCTION WITH SPECIFICATIONS AND SCHEDULES.

ISSUE	DESCRIPTION	DATE

File Number: HSOT/ARCH/200422

Title: LAYOUT PLAN TOILET BLOCK

Sheet Original: A - 3

SCALE 1:100

urban space designers
Building Design And Drafting
20/4 CLIFFORD COURT
HOWRAH 7018

HEMANT KHANNA
0402438170
info@urbanspacedesigners.com.au

Drawn By: GAGANDEEP KAUR

Drawing Number: DA-09

PLOT DATE 20-04-2022

PROJECT TITLE : PROPOSED ADDITION OF HALL & TOILET BLOCK AT EXISTING CULTURAL CENTER

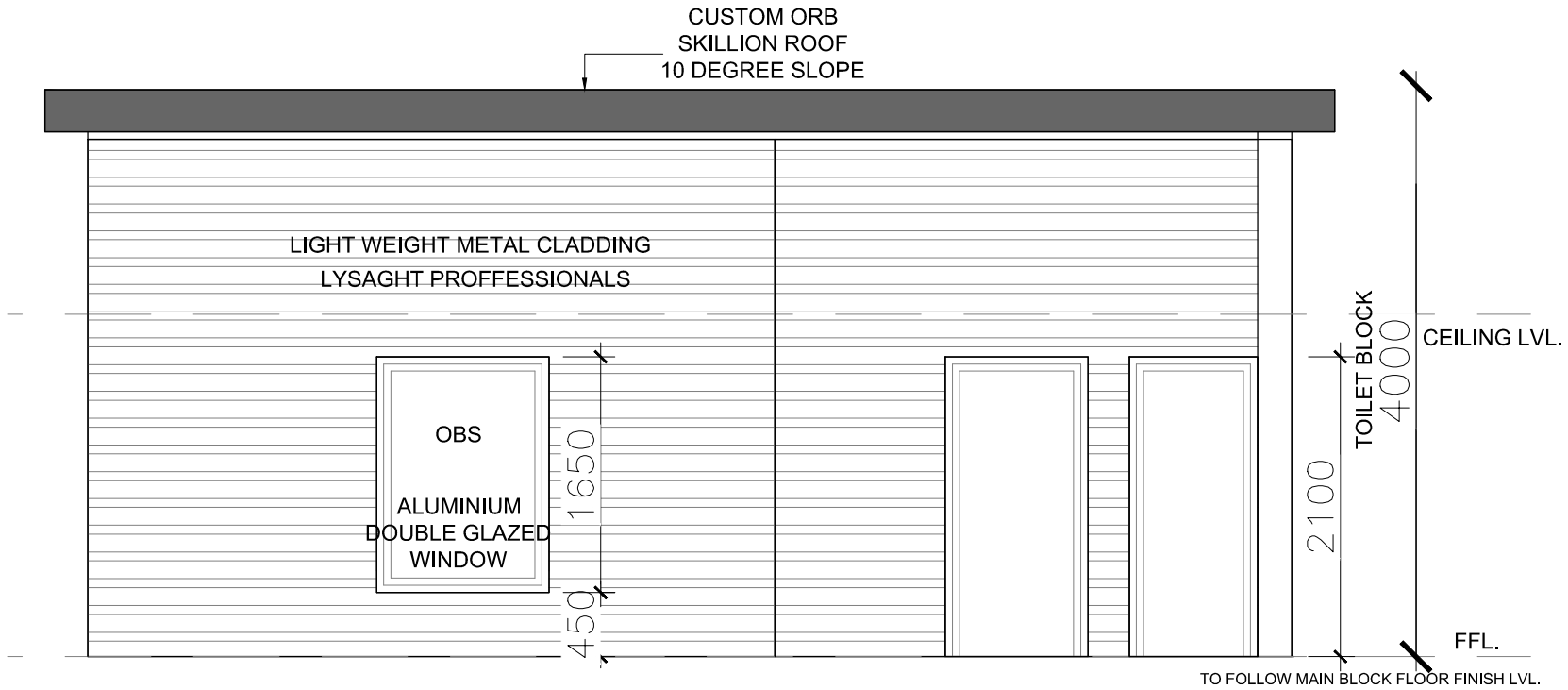

ELE 'A'

NOTES

1. **Low Reflective windows to be provided in accordance with clause GLE - S7.7.1.2 A1**
2. **Glazings and Frames to BCA part 3.6 AS2047 & AS1288**
3. **Double Glazed Low - e Glazings with standard A1 frames. (U - value 3.7 max, SHGC 0.60 approx.)**
4. **OG - Window Obscure Glass with a uniform transparency of 25%, in accordance with requirements of Interim Planning Scheme 2015.**

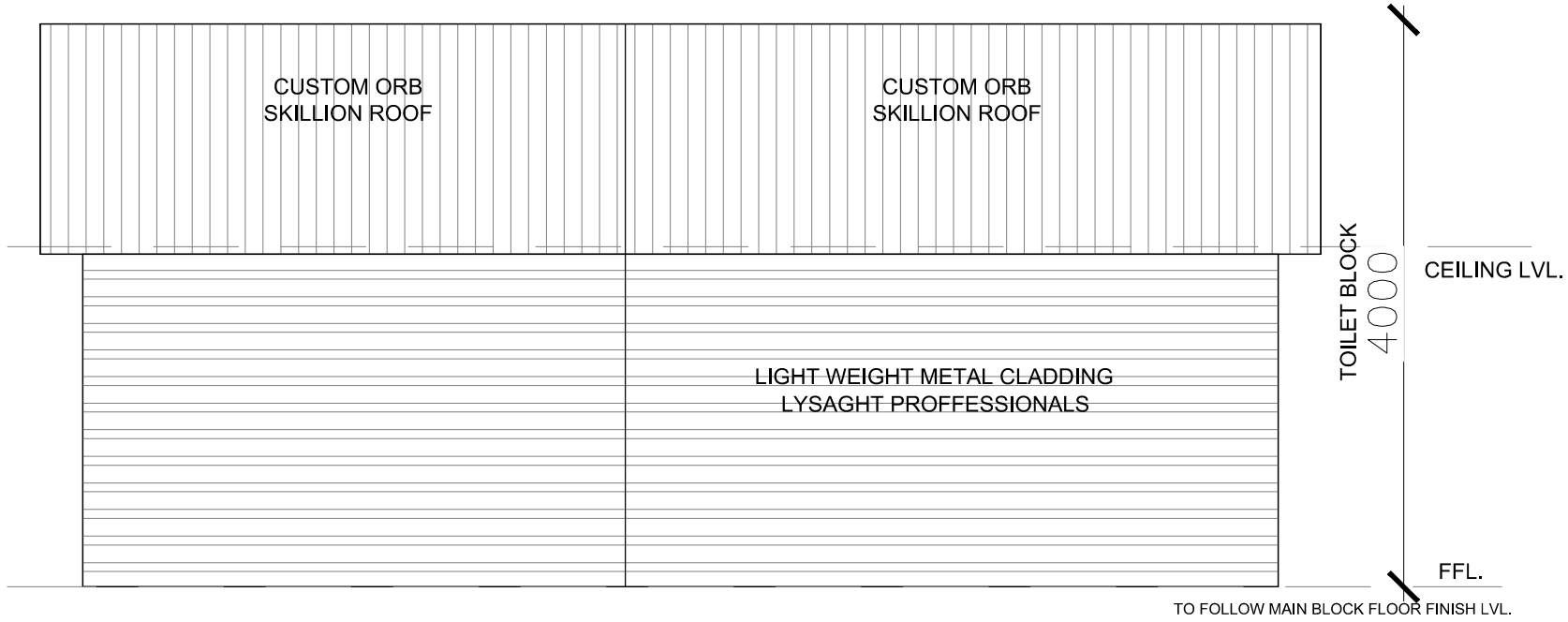

ELE 'B'

DEVELOPMENT APPLICATION

TOILET BLOCK ELEVATIONS

SCALE 1:50

NOTE: -

1) The information contained in this document is copyright and may not be used or reproduced for any other project or purpose. Verify all dimensions and levels on site and report any discrepencies to URBAN SPACE DESIGNERS for direction prior to the commencement of work. Drawings to be read in conjunction with all other contract documents. Use figured dimensions only. Do not scale from drawings. URBAN SPACE DESIGNERS cannot guarantee the acuracy of contentand format for copies of drawings issued electronically. If in doubt ask.The completion of the issued details checked and authorized section below is confirmation of the status of the drawing. The drawing shall not be used for the construction unless endorsed "for construction" and authorized for issue.
2) Read these drawings in conjunctions with drawings prepared by Urban space designers. Refer any discrepencies with the designer before proceeding with any building works.

PROJECT TEAM	ENGINEER:	ENERGY RATING:	SOIL REPORT:	Land Surveyor: LEARYCOX & CRIPPS ph: 0361182030	Contact: MATTHEW m: 0437364170

THIS DOCUMENT HAS BEEN PREPARED BY & IS THE PROPERTY OF URBAN SPACE DESIGNERS - LICENCED BUILDING DESIGNERS AND MAY ONLY BE USED FOR THE PURPOSE FOR WHICH IT WAS COMMISSIONED. copyright ©

DATE : 07-03-2022

Client:
HSOT

Site Address:

6 LETITIA GROVE, BRIDGEWATERS

GENERAL NOTES:

CHECK ALL DIMENSIONS AND MEASUREMENTS ON SITE PRIOR TO FABRICATION AND OR CONSTRUCTION. DIMENSIONS ARE IN MILLIMETERS "FRAME TO FRAME" AND DO NOT ALLOW FOR INTERIOR LININGS.

DO NOT SCALE DRAWINGS. **IF IN DOUBT ASK.**

ALL WORK IN ACCORDANCE WITH THE BUILDING CODE OF AUSTRALIA (BCA) AS AMENDED, RELEVANT AUSTRALIAN STANDARDS (AS) CODES AND GOOD BUILDING PRACTICES. DRAWINGS TO BE READ IN CONJUNCTION WITH SPECIFICATIONS AND SCHEDULES.

ISSUE	DESCRIPTION	DATE

File Number:
HSOT/ARCH/200422

Title:
ELEVATION

Sheet Original:
A - 3

SCALE 1:50

urban space designers
Building Design And Drafting
20/4 CLIFFORD COURT
HOWRAH 7018

HEMANT KHANNA
0402438170
info@urbanspacedesigners.com.au

Drawn By:
GAGANDEEP KAUR

Drawing Number:
DA-10

PLOT DATE
20-04-2022

PROJECT TITLE : PROPOSED ADDITION OF HALL & TOILET BLOCK AT EXISTING CULTURAL CENTER

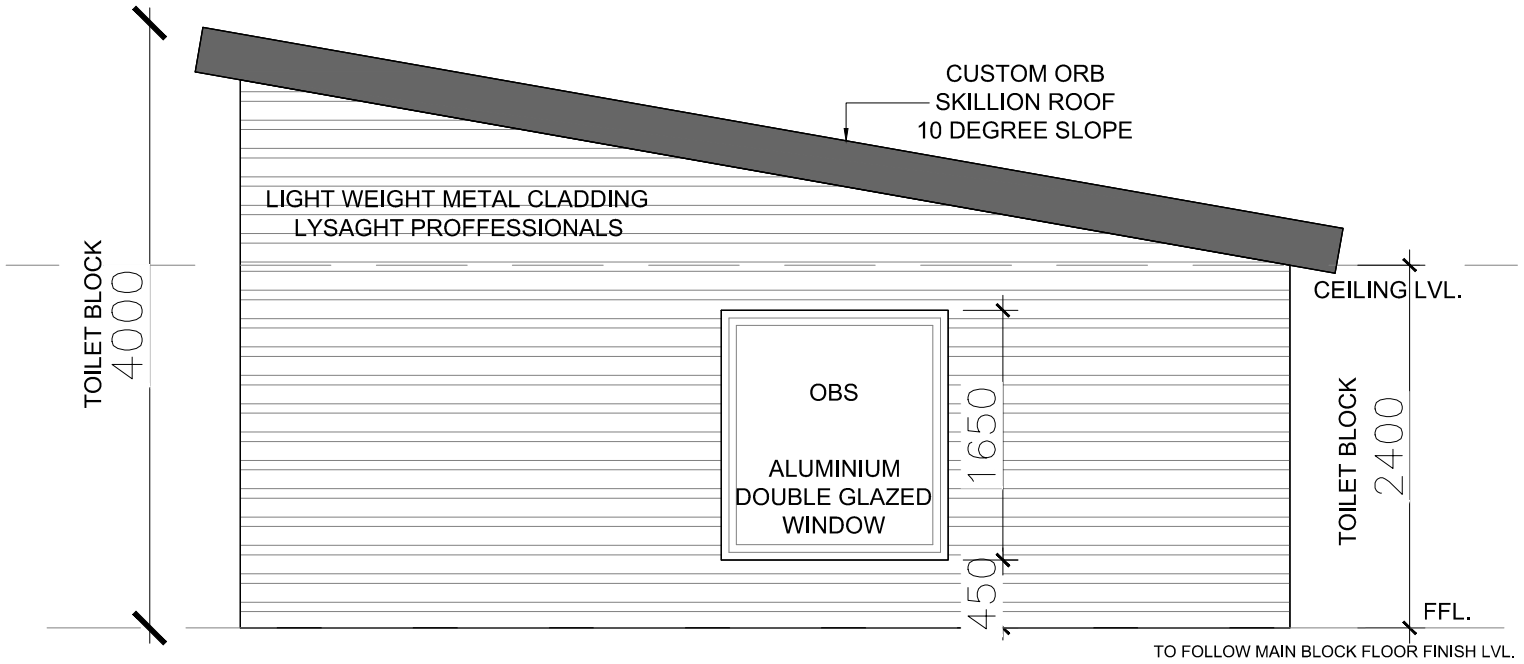

ELE 'C'

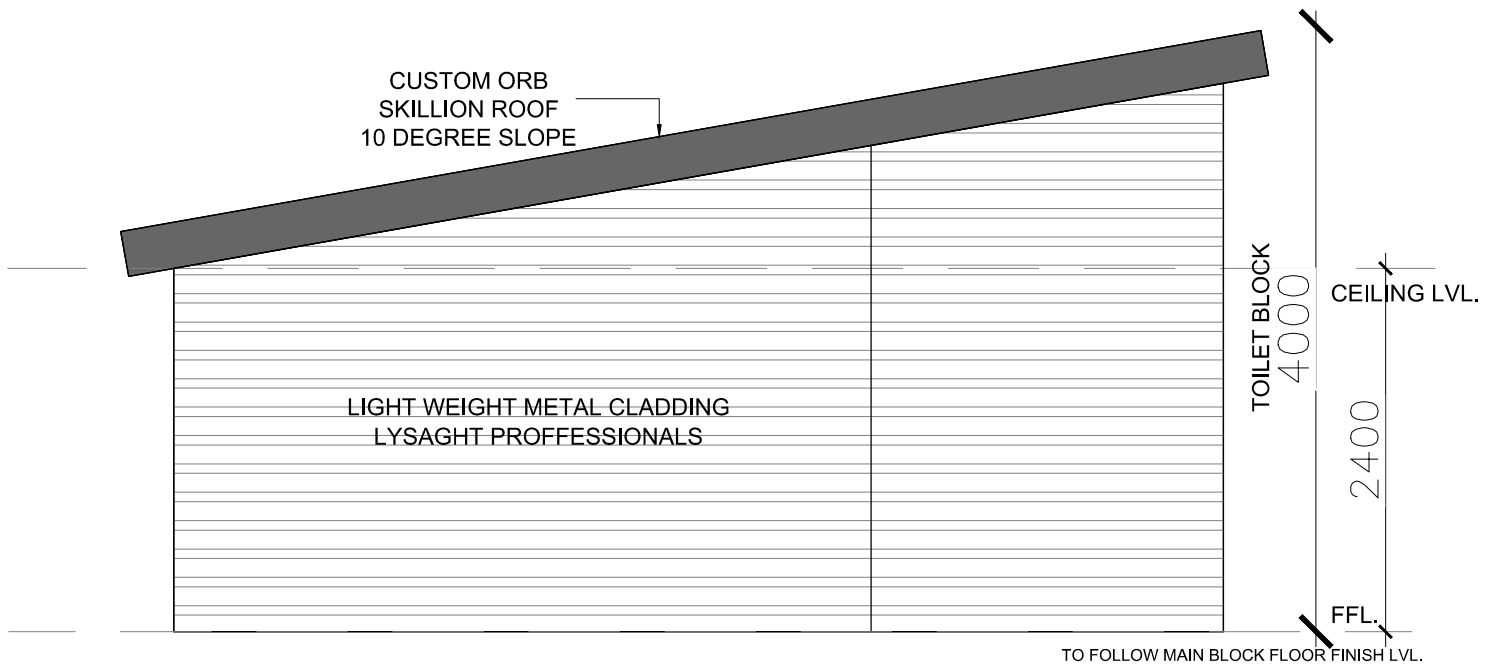

ELE 'D'

NOTES

1. **Low Reflective windows to be provided in accordance with clause GLE - S7.7.1.2 A1**
2. **Glazings and Frames to BCA part 3.6 AS2047 & AS1288**
3. **Double Glazed Low - e Glazings with standard A1 frames. (U - value 3.7 max, SHGC 0.60 approx.)**
4. **OG - Window Obscure Glass with a uniform transparency of 25%, in accordance with requirements of Interim Planning Scheme 2015.**

DEVELOPMENT APPLICATION

TOILET BLOCK ELEVATIONS

SCALE 1:50

NOTE: -

1) The information contained in this document is copyright and may not be used or reproduced for any other project or purpose. Verify all dimensions and levels on site and report any discrepancies to URBAN SPACE DESIGNERS for direction prior to the commencement of work. Drawings to be read in conjunction with all other contract documents. Use figured dimensions only. Do not scale from drawings. URBAN SPACE DESIGNERS cannot guarantee the acuracy of content and format for copies of drawings issued electronically. If in doubt ask.The completion of the issued details checked and authorized section below is confirmation of the status of the drawing. The drawing shall not be used for the construction unless endorsed "for construction" and authorized for issue.
2) Read these drawings in conjunctions with drawings prepared by Urban space designers. Refer any discrepencies with the designer before proceeding with any building works.

PROJECT TEAM	ENGINEER:	ENERGY RATING:	SOIL REPORT:	Land Surveyor: LEARYCOX & CRIPPS ph: 0361182030	Contact: MATTHEW m: 0437364170

THIS DOCUMENT HAS BEEN PREPARED BY & IS THE PROPERTY OF URBAN SPACE DESIGNERS - LICENCED BUILDING DESIGNERS AND MAY ONLY BE USED FOR THE PURPOSE FOR WHICH IT WAS COMMISSIONED. copyright ©

DATE : 07-03-2022

Client: HSOT

Site Address:
6 LETITIA GROVE, BRIDGEWATERS

GENERAL NOTES:

CHECK ALL DIMENSIONS AND MEASUREMENTS ON SITE PRIOR TO FABRICATION AND OR CONSTRUCTION. DIMENSIONS ARE IN MILLIMETERS "FRAME TO FRAME" AND DO NOT ALLOW FOR INTERIOR LININGS.

DO NOT SCALE DRAWINGS. **IF IN DOUBT ASK.**

ALL WORK IN ACCORDANCE WITH THE BUILDING CODE OF AUSTRALIA (BCA) AS AMENDED, RELEVANT AUSTRALIAN STANDARDS (AS) CODES AND GOOD BUILDING PRACTICES. DRAWINGS TO BE READ IN CONJUNCTION WITH SPECIFICATIONS AND SCHEDULES.

ISSUE	DESCRIPTION	DATE

File Number: HSOT/ARCH/200422

Title: ELEVATION

Sheet Original: A - 3

SCALE 1:100

urban space designers
Building Design And Drafting
20/4 CLIFFORD COURT
HOWRAH 7018

HEMANT KHANNA
0402438170
info@urbanspacedesigners.com.au

Drawn By: GAGANDEEP KAUR

Drawing Number: DA-11

PLOT DATE 20-04-2022

15th July 2022

Brighton City Council
1 Tivoli Road
Old Beach TAS 7017
Email: admin@brighton.tas.gov.au

Dear Sir/Madam

Car Parking and Traffic Impact Assessment – Proposed Place of Worship (Community Meeting and Entertainment) at 6 to 7 Letitia Grove, Bridgewater

1. Overview

We have been commissioned by Hindu Society of Tasmania c/o Urban Space Designers to undertake a car parking and traffic impact assessment for a proposed place of worship (community meeting and entertainment use) on a site that currently contains a 24-seat community hall (community meeting and entertainment use) within 133m^2 of floor area (measurement includes internal partitions and boundary walls) and 9 car parking spaces. Maximum number of people permitted on site at any one time is 27.

The proposal involves the construction of 360m^2 of temple hall for a total (combined with existing building) area of 493m^2, and reconfiguration and addition of on-site parking spaces for a total of 35 spaces that are shared with the existing community hall.

The proposed temple is open for public and food will be frequently served around midday. Operation hours are as follows:

- Monday to Friday: 9.30am to 1pm, 6pm to 9.30pm.
- Saturday and Sunday: 9.30am to 2.30pm (with 12pm to 1.30pm as the peak period); 6pm to 9.30pm.

On weekdays, there will be between 4 and 6 people arriving and departing per hour with a total of 15 to 30 people catered for between 9.30am and 1pm, and a total of 15 to 30 people catered for between 6pm and 9.30pm. The applicant anticipates a maximum of 6 people on the premises at any one time, excluding volunteers and staff on weekdays. There will be 1 volunteer and 1 priest at any one time on weekdays.

Peak period occurs on weekends (Saturdays and Sundays) between 12pm to 1.30pm. 20 to 30 people will arrive and depart, i.e. individuals or small groups arrive at different points in time, with each group/person spending around 15 to 20 minutes on the premises before departing, and arrivals and departures spread out evenly over the 1.5 hour period. There will be a total of 50 to 80 people catered for over the weekend mid-day peak

period. The applicant anticipates a maximum of 36 people on the premises at any one time, comprising 30 attendees, 5 volunteers and 1 priest at peak periods on weekends.

The existing community hall currently operates with the characteristics associated with the proposed worship hall. The applicant claims that the proposed hall will not attract additional patronage, but serves to provide improved facilities for its members. Given that the proposed development results in additional floor area, additional car parking spaces are required as statutory car parking requirements are based on the greater of quantum derived from area based or patronage / seating-based parking rates.

2. Car Parking Requirements

Clause C2.5.1 A1 of the Brighton Council's Parking and Sustainable Transport Code states the number of on-site car parking spaces must be no less than the number specified in Table C2.1. Table C2.1 specifies the following car parking rates:

- Community Meeting and Entertainment – Place of Worship, Public Hall, Function Centre: 1 car parking space per 15m^2 of floor area, or 1 car parking space per 3 seats (patrons) whichever is greater.

493m^2 of community meeting and entertainment use requires 33 parking spaces. The provision of 35 on-site parking spaces comprising 33 normal spaces and 2 disabled spaces complies with the requirement of Table C2.1 of Brighton Council's Parking and Sustainable Transport Code.

Table 1 presents the car parking requirements of the existing use of the land.

Land Use	Characteristics	Parking Rate as per Table C2.1	Parking Requirements		
			Monday to Friday 9.30am to 1pm, 6pm to 9.30pm	Monday to Friday 1pm to 6pm, Saturday and Sunday 2.30pm to 6pm	Saturday and Sunday, 9.30am to 2.30pm, 6pm to 9.30pm
			Up to 8 (6 members, 1 volunteer, 1 priest) people on site at any one time	Between 0 to 3 people on-site at any one time.	Up to 27 (22 members, 4 volunteers, 1 priest) people on site at any one time
Community Meeting and Entertainment (Community Hall)	133m^2. Maximum number of people permit on site at any one time is 27.	Greater of 1 space per 15m^2 or 1 space per 3 seats (people).	9 spaces (rounded up from 8.4 spaces based on 126m^2 of floor space	9 spaces (rounded up from 8.4 spaces based on 126m^2 of floor space	9 spaces (rounded up from 8.4 spaces based on 126m^2 of floor space
Car Parking Requirement – Based on Area			9 spaces	9 spaces	9 spaces
Total Car Parking Requirement – Based on Patronage			3 spaces	1 space	9 spaces (based on maximum 27 people on-site at any one time)
On-site Car Parking Provision			9 spaces	9 spaces	9 spaces
All (100 percent) of Parking provided on-site? (Yes/No)			*Yes*	*Yes*	*Yes*

Table 1: Car Parking Requirements and Off-Site Parking Impacts at Different Times of the Day, and Different Days of the Week

Table 2 presents the car parking requirements of the proposed uses of the land.

Land Use	Characteristics	Parking Rate as per Table C2.1	Parking Requirements		
			Monday to Friday 9.30am to 1pm, 6pm to 9.30pm	Monday to Friday 1pm to 6pm, Saturday and Sunday 2.30pm to 6pm	Saturday and Sunday, 9.30am to 2.30pm, 6pm to 9.30pm
			Up to 8 (6 members, 1 volunteer, 1 priest) people on site at any one time	Between 0 to 3 people on-site at any one time.	Up to 27 (22 members, 4 volunteers, 1 priest) people on site at any one time – noting that patronage-based car parking calculation allows for up to 72 people on-site at any one time
Community Meeting and Entertainment (Community Hall)	133m^2. Maximum number of people permit on site at any one time is 27.	Greater of 1 space per 15m^2 or 1 space per 3 seats (people).	33 spaces based on 493m^2 of combined floor space	33 spaces based on 493m^2 of combined floor space	33 spaces based on 493m^2 of combined floor space
Community Meeting and Entertainment (Place of worship)	360m^2. Maximum number of people permit on site at any one time is 45.	Greater of 1 space per 15m^2 or 1 space per 3 seats (people).			
Total Car Parking Requirement – Based on Area			33 spaces	33 spaces	33 spaces
Total Car Parking Requirement – Based on Patronage			3 spaces	1 space	24 spaces (based on maximum 72 people on-site at any one time)
On-site Car Parking Provision			35 spaces	35 spaces	35 spaces
All (100 percent) of Parking provided on-site? (Yes/No)			*Yes*	*Yes*	*Yes*

Table 2: Car Parking Requirements of the Proposal and Off-Site Parking Impacts at Different Times of the Day, and Different Days of the Week

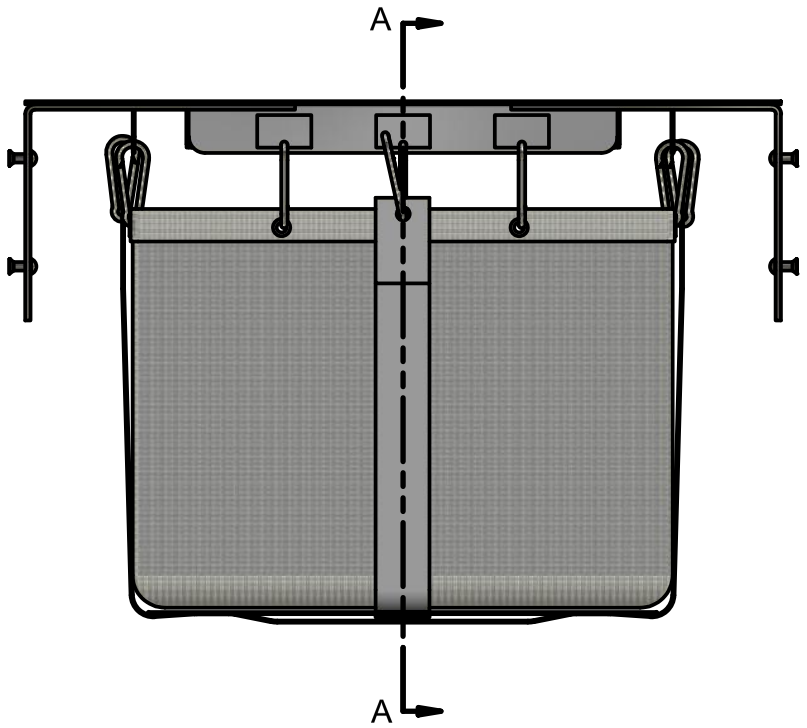

ELEVATION VIEW

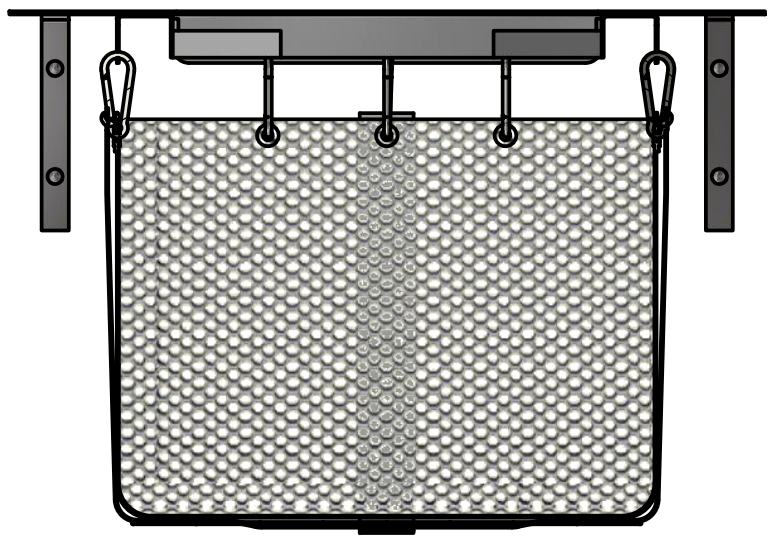

SECTION A-A

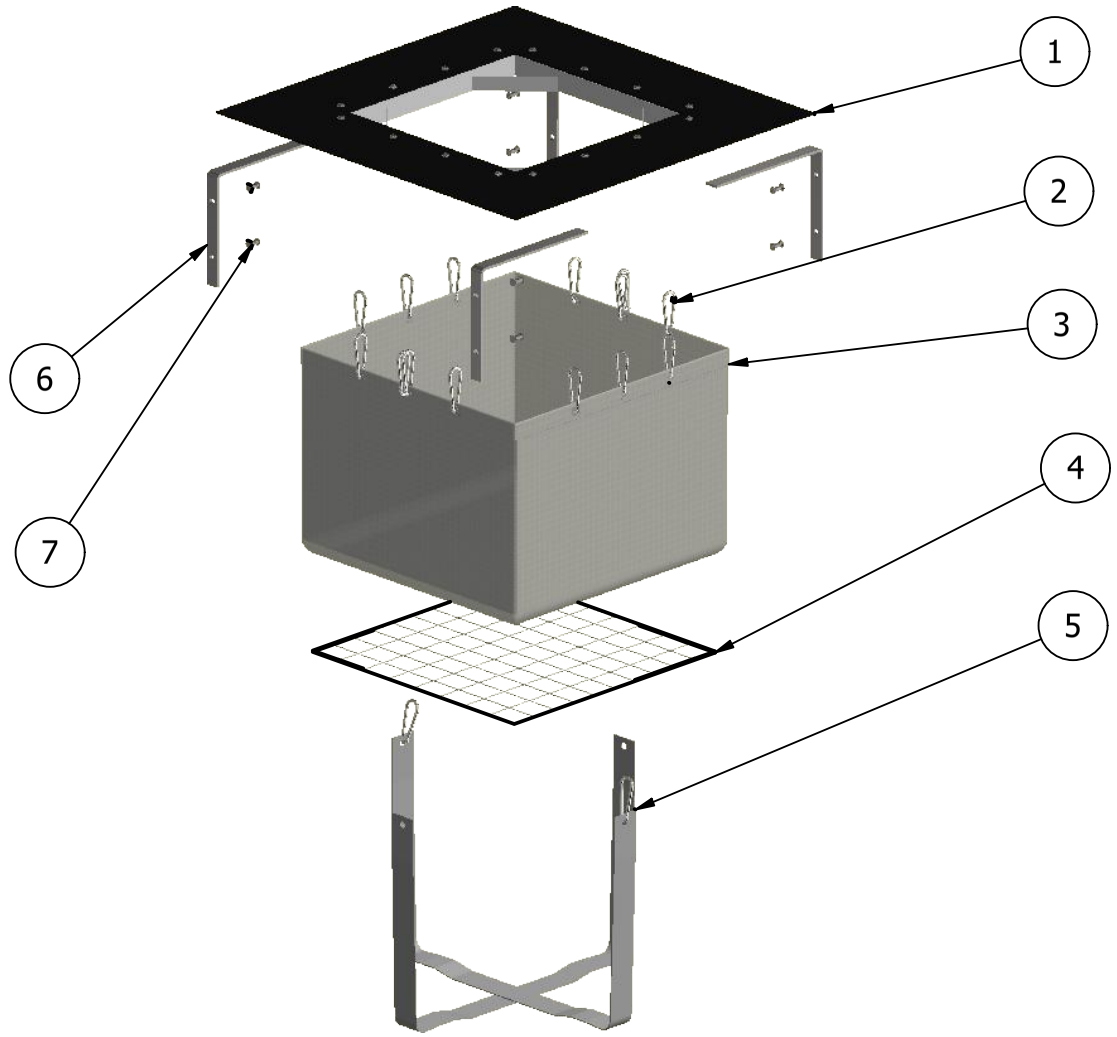

ISOMETRIC EXPLOSION VIEW

ITEM	PART NAME	MODEL NO. - QTY			
		SSS.4545.C1	SSS.6060.C1	SSS.6090.C1	SSS.7575.C1
1	STORMSACK BODY METAL & POLY	1	1	1	1
2	CARABINER CLIP	12	16	18	32
3	CHTCHMENT BAG	1	1	1	1
4	BAG SUPPORT - METAL MESH	0	1	1	1
5	STRAP 50mm	0	2	2	2
6	GAL. SUPPORT BRACKETS	0	4	4	4
7	ALUMINIUM KNOCKING	0	8	8	8

TOLERANCE: All Dimensions to Closest 10 mm & +/- 30 mm

ALL INTERCONNECTING PIPEWORK, PITS AND ASSOCIATED DRAINAGE BY OTHERS

REV	DESCRIPTION	DESIGNER	DATE	CHECKED BY
1	INITIAL RELEASE	M.M	9/12/2020	

CLIENT:

CONFIDENTIAL - The drawings must not be disclosed to any third parties without written permission from SPEL STORMWATER . Unauthorised disclosure may result in prosecution.
© SPEL STORMWATER - This drawing is the property of SPEL STORMWATER ABN: 83 151 832 629 and is subject to return on demand. It is submitted for the use only in connection with the proposal and contracts of SPEL STORMWATER with the expressed conditions that it is not to be reproduced or copied in any form. This data must only be used in accordance with our standard terms and conditions.
© Copyright
SPEL STORMWATER accepts no responsibility for any loss or damage resulting from any person acting on this information.
The details and dimensions contained in this document may change, please check with SPEL STORMWATER for confirmation of current specifications.

Drawn M.M	Date 9/12/2020
Check	Date
Verified	Date
Approved	Date

Request No.
ASSEMBLY DRAWING

spelstormwater
joy in water
spel.com.au

PROJECT :

TITLE
SPEL STOMSACK
ASSEMBLY DRAWING

SCALE	SIZE	SHEET	REV
N.T.S	A3	1	1

CUSTOMER CODE : DWG No. SP20-SS28600-C

E:\Vault Working Folder\Designs\SPEL\STD ITEMS\PRODUCTS\STORMSACK\SPEL STORMSACK\STORMSACK FRAME & GA - FINAL VERSION 2015\Mount Frames - 600 X 600\SP20-SS28600-C.idw

ISSUE FOR APPROVAL
NOT FOR CONSTRUCTION

Site Level Confirmation	
Finished Surface Level (FSL)	RL:
Access Cover Thickness	mm
Inlet Invert Level	RL:
Outlet Invert Level	RL:
Company:	
Name:	
Date:	

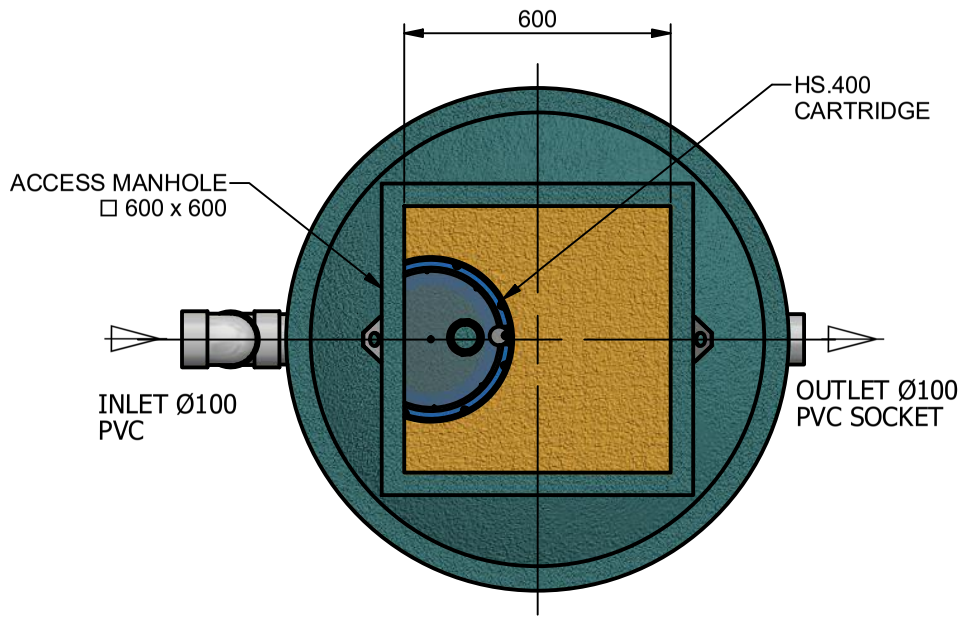

PLAN VIEW

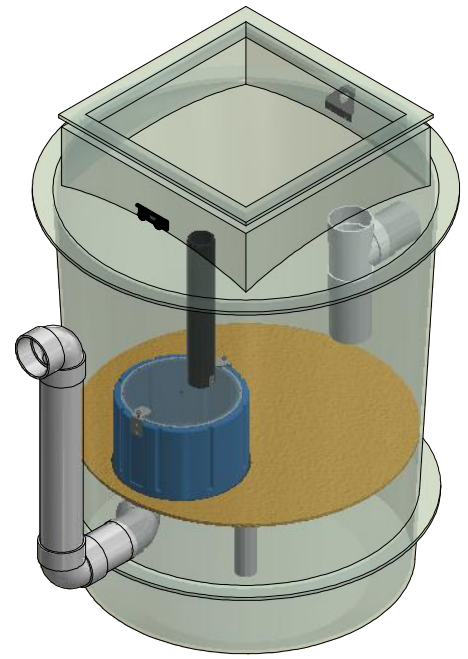

ISOMETRIC VIEW

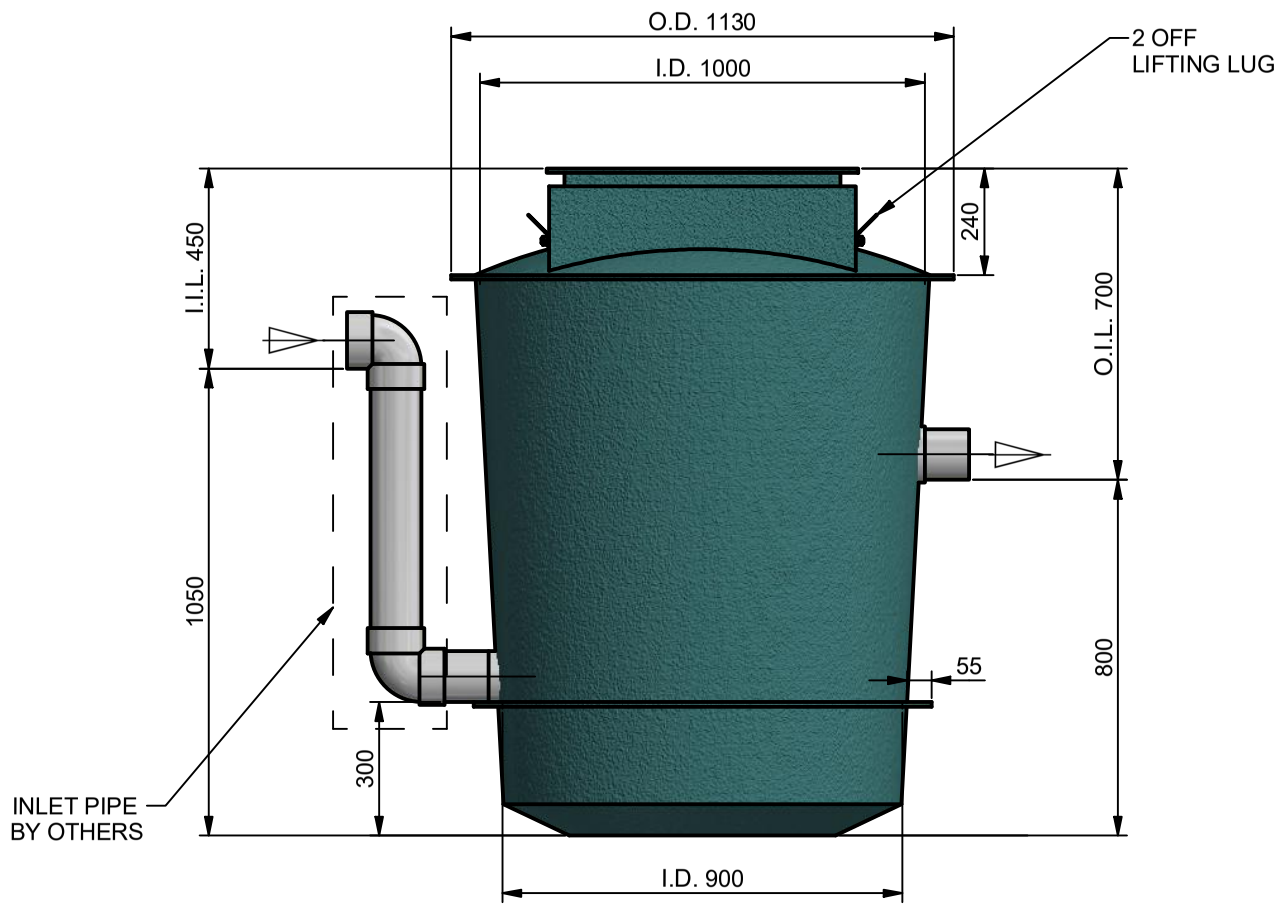

ELEVATION VIEW

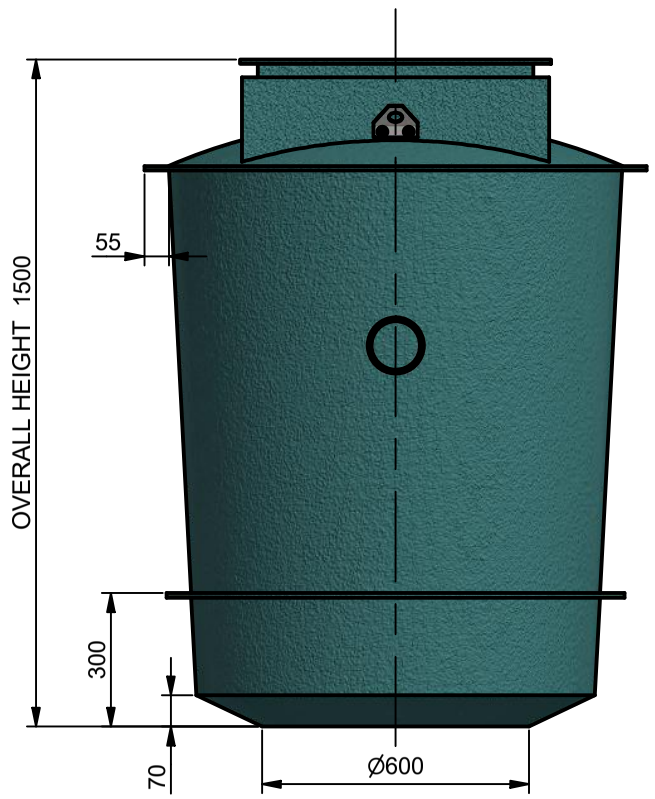

SIDE VIEW

NOTES:
1: THE COMBINED HEIGHT OF AN EXTENSION-RISER & LID EXCEEDING 1000mm WILL REQUIRE THE TANK TO BE OF HEAVY DUTY CONSTRUCTION

2: SYSTEM PIPEWORK MUST HAVE AT LEAST 250 MM OF FALL TO OPERATE CORRECTLY

3: DRY WEIGHT OF HYDROSYSTEM = 75 kg

TOLERANCE: All Dimensions to Closest 10 mm & +/- 30 mm

ALL INTERCONNECTING PIPEWORK, PITS AND ASSOCIATED DRAINAGE BY OTHERS

REV	DATE	BY	DESCRIPTION	CHK
1	11/03/2020	P.Z.	INITIAL RELEASE	

CLIENT:

CONFIDENTIAL - The drawings must not be disclosed to any third parties without written permission from SPEL STORMWATER . Unauthorised disclosure may result in prosecution.
© SPEL STORMWATER - This drawing is the property of SPEL STORMWATER ABN: 83 151 832 629 and is subject to return on demand. It is submitted for the use only in connection with the proposal and contracts of SPEL STORMWATER with the expressed conditions that it is not to be reproduced or copied in any form. This data must only be used in accordance with our standard terms and conditions.
© Copyright
SPEL STORMWATER accepts no responsibility for any loss or damage resulting from any person acting on this information.
The details and dimensions contained in this document may change, please check with SPEL STORMWATER for confirmation of current specifications.

Drawn P.Z.	Date 11/03/2020
Check	Date
Verified	Date
Approved	Date
Request No.	

spelstormwater
joy in water
spel.com.au

PROJECT

TITLE
SPEL HYDROSYSTEM
SHS.400.H.01.100.PVC
GENERAL ARRANGEMENT

SCALE	SIZE	SHEET	REV
N.T.S	A3	1	1

CUSTOMER CODE : DWG No. SP20-HY12420-S

F:\Vault Working Folder\Designs\SPEL\PRODUCTS\HYDROSYSTEM\400 SERIES\STANDARD\HS.400.HM FILTER ELEMENT\TAPERED TANKS\1460H TANK\1 HYDRO\SP20-HY12420-S.idw

REVISION HISTORY				
REV	DESCRIPTION	DESIGNER	CREATION DATE	CHECKED BY
1	INITIAL RELEASE	R.R.	06/07/2020	P.Z.

ISSUE FOR APPROVAL
NOT FOR CONSTRUCTION

APPROVED..... ☐
NAME.....
SIGNED.....
DATE...../...../.....

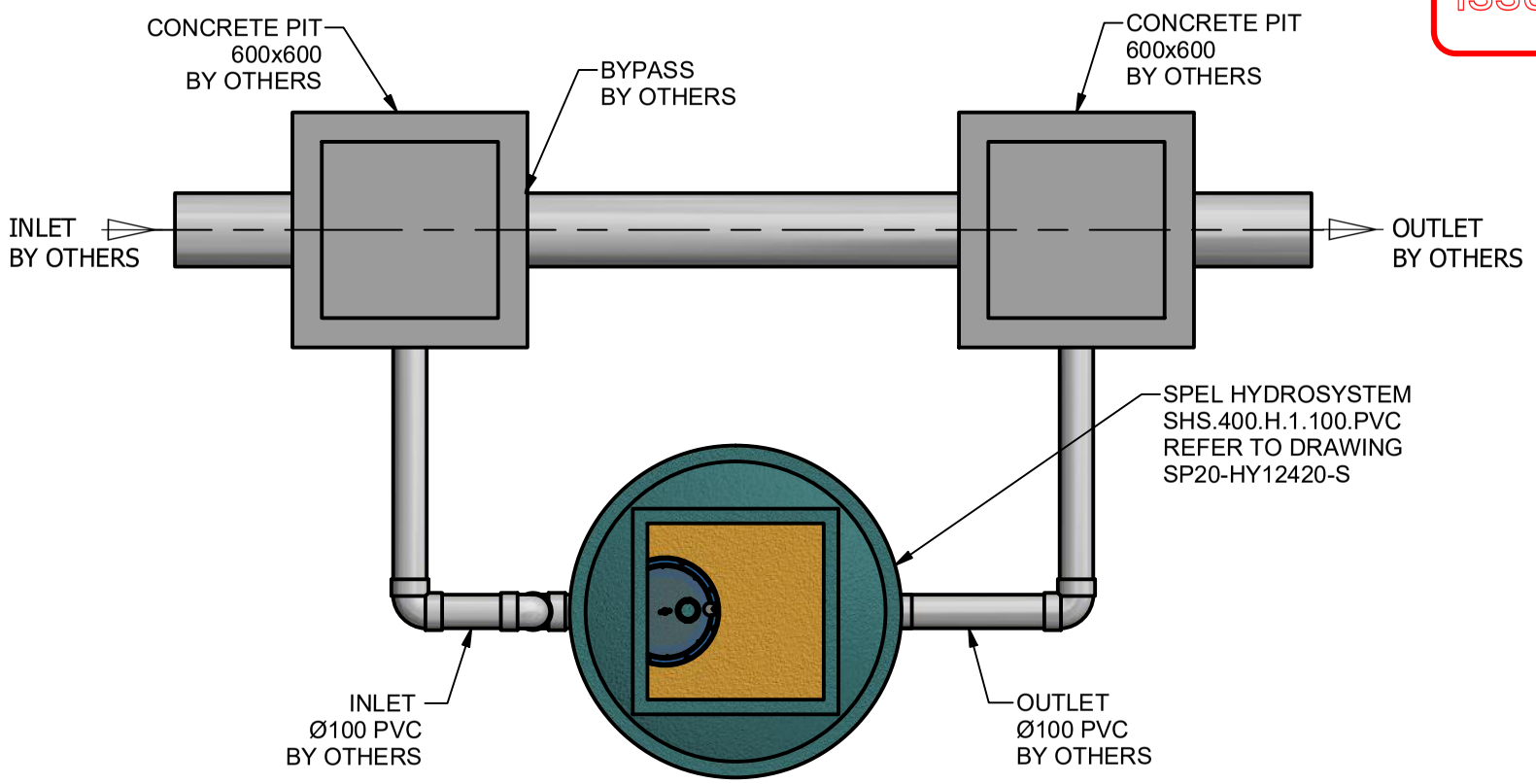

PLAN VIEW

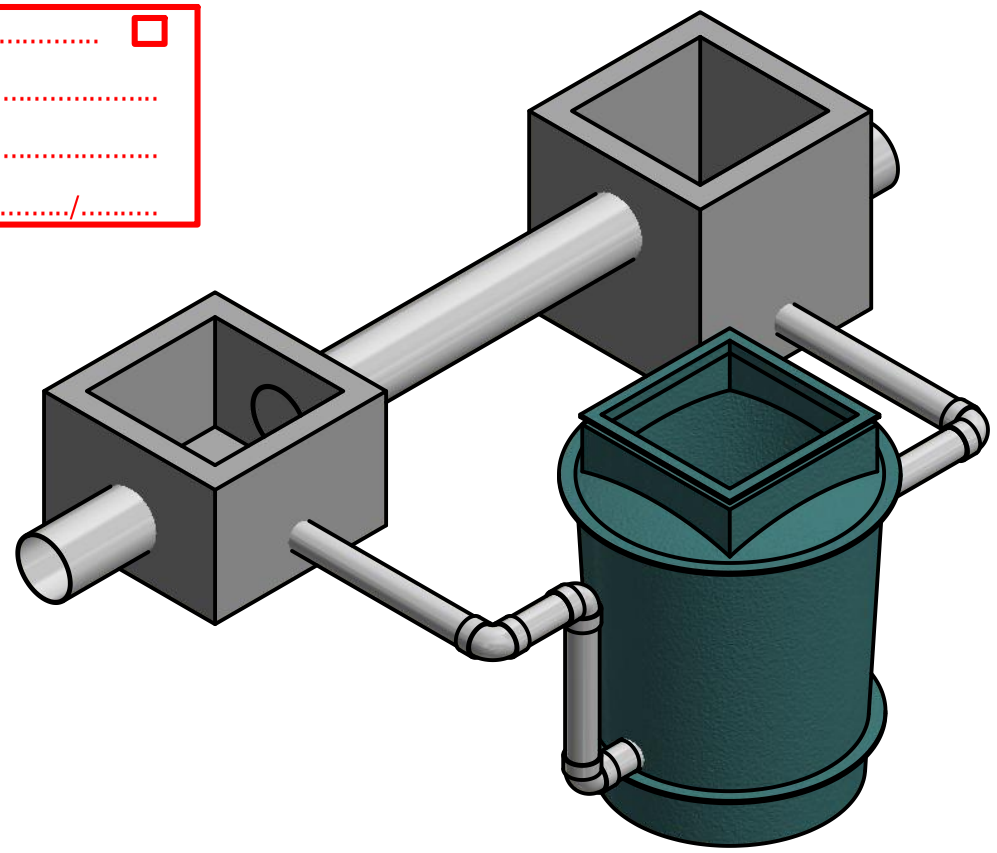

ISOMETRIC VIEW

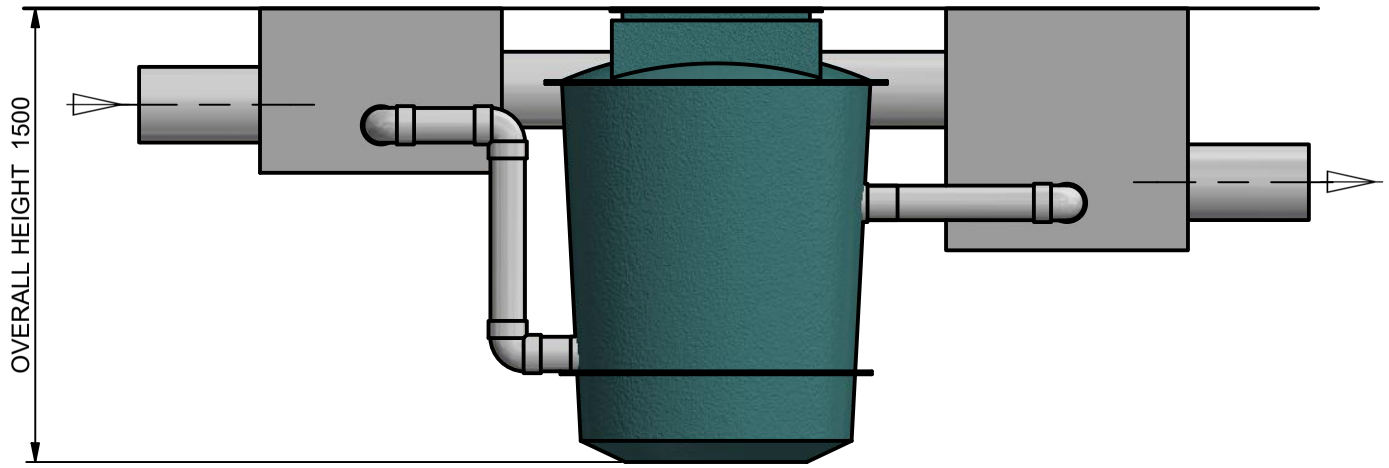

ELEVATION VIEW

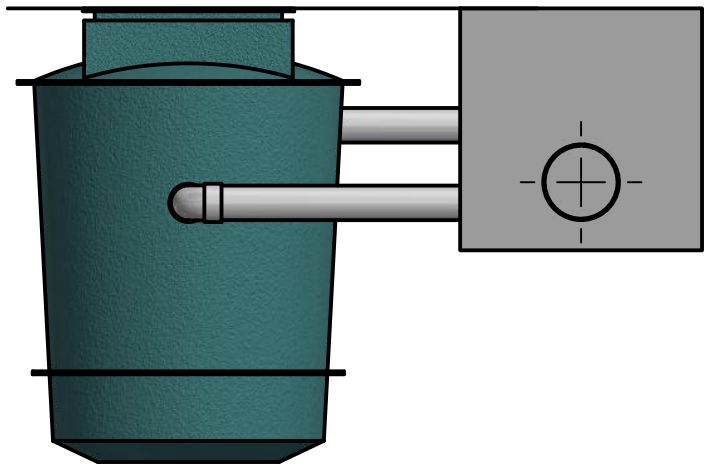

SIDE VIEW

Site Level Confirmation	
Finished Surface Level (FSL)	RL:
Access Cover Thickness	mm
Inlet Invert Level	RL:
Outlet Invert Level	RL:
Company:	
Name:	
Date:	

NOTES:
1: THE COMBINED HEIGHT OF AN EXTENSION-RISER & LID EXCEEDING 1000mm WILL REQUIRE THE TANK TO BE OF HEAVY DUTY CONSTRUCTION

2: SYSTEM PIPEWORK MUST HAVE AT LEAST 250 MM OF FALL TO OPERATE CORRECTLY

TOLERANCE: ALL DIMENSIONS TO CLOSEST 10mm +/- 30mm UNLESS OTHERWISE STATED.

CLIENT:

DISTRIBUTOR :

CONFIDENTIAL - The drawings must not be disclosed to any third parties without written permission from SPEL Environmental Sydney. Unauthorised disclosure may result in prosecution.
© SPEL Environmental - This drawing is the property of SPEL Environmental ABN: 83 151 832 629 and is subject to return on demand. It is submitted for the use only in connection with the proposal and contracts of SPEL Environmental with the expressed conditions that it is not to be reproduced or copied in any form. This data must only be used in accordance with our standard terms and conditions.
© Copyright
SPEL Environmental accepts no responsibility for any loss or damage resulting from any person acting on this information.
The details and dimensions contained in this document may change, please check with SPEL Environmental for confirmation of current specifications.

Drawn R.R.	Date 06/07/2020
Check P.Z.	Date 07/07/2020
Verified	Date
Approved	Date
Request No. RN4497	

SPEL ENVIRONMENTAL
INTEGRATED WATER SOLUTIONS
100 Silverwater Road Silverwater NSW 2128
PH: 1300 773 500 | E: sales@spel.com.au
www.spel.com.au

PROJECT : SHS.400.H.01.100.PVC

TITLE SPEL HYDROSYSTEM WITH BYPASS
SHS.400.H.1.100.PVC
GENERAL ARRANGEMENT

SCALE	SIZE	SHEET	REV
N.T.S	A3	1	1

CUSTOMER CODE :

DWG No. SP20-HY15290-S

C:\Users\robin\Documents\Vault\Designs\SPEL\PRODUCTS\HYDROSYSTEM\400 SERIES\STANDARD\HS.400.HM FILTER ELEMENT\TAPERED TANKS\1460H TANK\1 HYDRO\SP20-HY15290-S.idw

PROJECT TITLE : PROPOSED ADDITION OF HALL & TOILET BLOCK AT EXISTING CULTURAL CENTER

PLUMBER TO CONFIRM THE LOCATION OF EXISTING ONSITE SERVICES PRIOR TO COMMENCEMENT OF ANY EXCAVATION

AGG DRAINS TO BE INSTALLED PRIOR TO SLAB PREPARATION. EVIDENCE OF AGG DRAIN INSTALLATION TO BE SUPPLIED TO THE ENGINEER

ALL WORKS ARE TO BE IN ACCORDANCE WITH THE WATER SUPPLY CODE OF AUSTRALIA AND SEWERAGE CODE OF AUSTRALIA

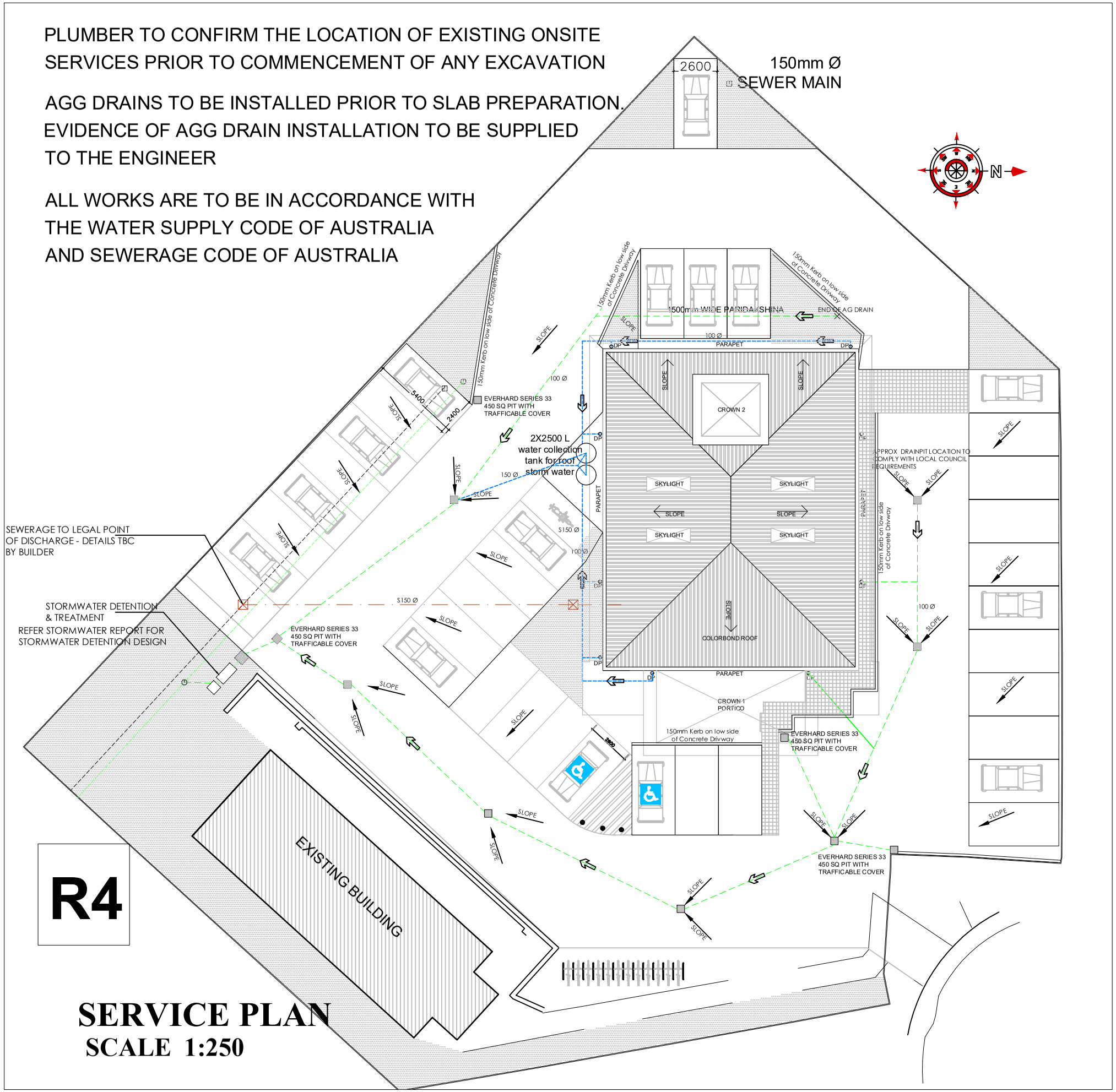

R4

SERVICE PLAN
SCALE 1:250

DEVELOPMENT APPLICATION

NOTE

In accordance with Planning Clauses

Currently Proposed Lot fall under General Business Zone Local Area Objectives

Planning Permit for the existing hall is in place and built.

Site plan at a scale of 1:250. The site plan showing all buildings,
boundaries, easements, driveways, boundary setbacks, setback
from a shared driveway and outdoor space.
There is no new fence proposed crossing easement

The location of Sewer Main and water is located on the plans by referring Land Survey drawing prepared by Surveyor Leary and cox.
Detail Survey Drawing also attached with the Development Application for reference

STORM WATER CONCEPT PLAN

150 Ø uPVC STORMWATER
1:100 MIN FALL

100 Ø uPVC STORMWATER
1:100 MIN FALL

S150 Ø uPVC SEWERAGE
1.67% MIN FALL

150mm CAST IN KERB TO DRIVEWAY PERIMETER.
I.O. AT EACH INTERSECTION AND BEND

DATE : 07-03-2022

Client: HSOT

Site Address:
6 LETITIA GROVE, BRIDGEWATERS

GENERAL NOTES:
CHECK ALL DIMENSIONS AND MEASUREMENTS ON SITE PRIOR TO FABRICATION AND OR CONSTRUCTION. DIMENSIONS ARE IN MILLIMETERS "FRAME TO FRAME" AND DO NOT ALLOW FOR INTERIOR LININGS.

DO NOT SCALE DRAWINGS. IF IN DOUBT ASK.

ALL WORK IN ACCORDANCE WITH THE BUILDING CODE OF AUSTRALIA (BCA) AS AMENDED, RELEVANT AUSTRALIAN STANDARDS (AS) CODES AND GOOD BUILDING PRACTICES. DRAWINGS TO BE READ IN CONJUNCTION WITH SPECIFICATIONS AND SCHEDULES.

ISSUE	DESCRIPTION	DATE
R1	UPDATED PARKING LAYOUT	16/06/22
R2	UPDATED PARKING LAYOUT & BLDG AREA	10/10/22
R3	STORMWATER LAYOUT UPDATED	09/02/23
R4	STORMWATER LAYOUT UPDATED	08/11/23

File Number: HSOT/ARCH/200422

Title: SERVICE PLAN

Sheet Original: A - 3

SCALE 1:250

urban space designers
Building Design And Drafting
TASMANIA . VICTORIA
HEMANT KHANNA
info@urbanspacedesigners.com.au
0402438170
License Number: 381246362

Drawn By: GAGANDEEP KAUR

Drawing Number: DA-03

PLOT DATE 20-04-2022

03

PROJECT TEAM	ENGINEER:	ENERGY RATING:	SOIL REPORT:	LAND SURVEYOR: LEARYCOX & CRIPPS ph: 0361182030	Contact: MATTHEW m: 0437364170

THIS DOCUMENT HAS BEEN PREPARED BY & IS THE PROPERTY OF URBAN SPACE DESIGNERS - LICENCED BUILDING DESIGNERS AND MAY ONLY BE USED FOR THE PURPOSE FOR WHICH IT WAS COMMISSIONED.

copyright

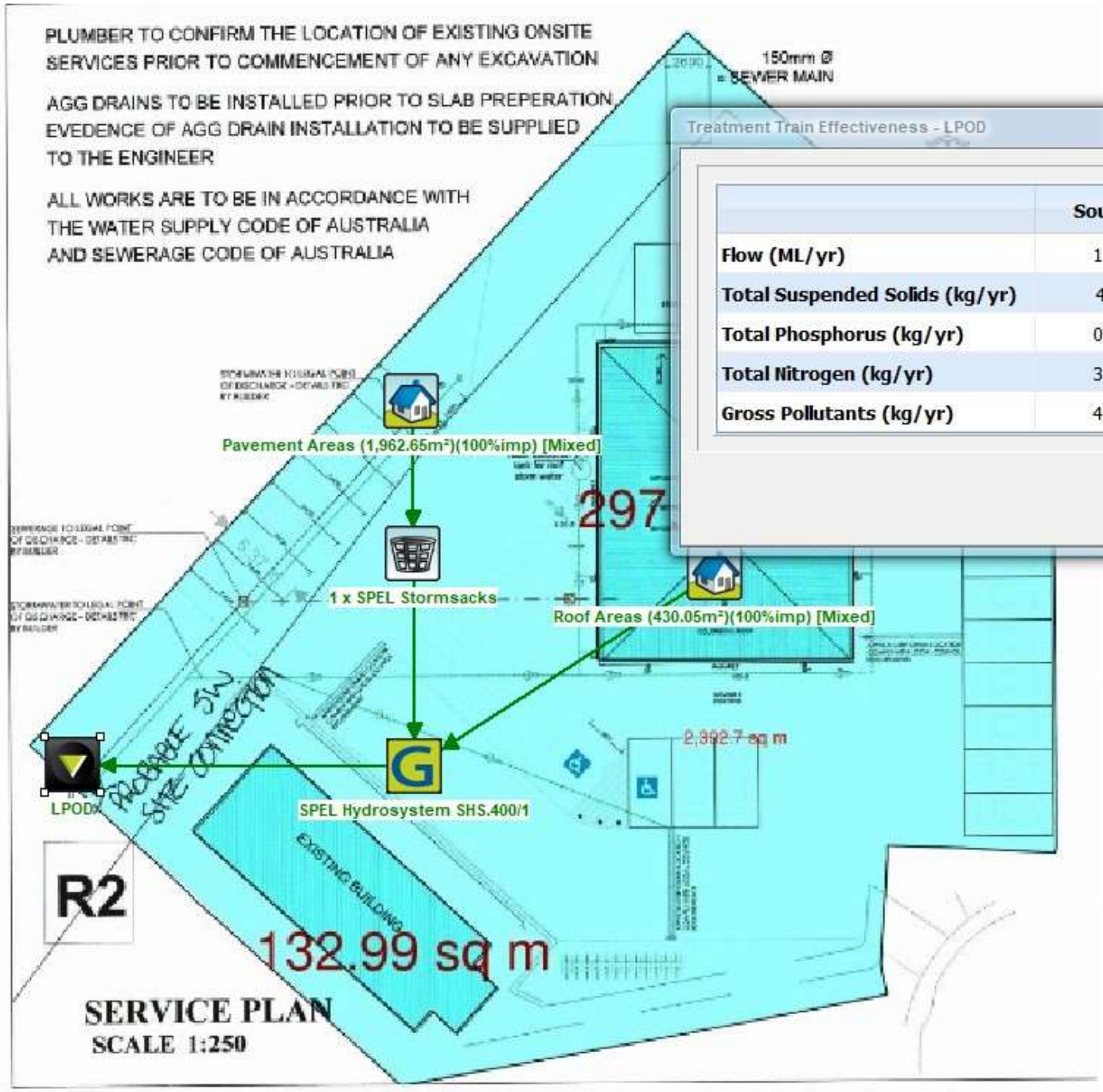

Treatment Train Effectiveness - LPOD

	Sources	Residual Load	% Reduction
Flow (ML/yr)	1.32	1.32	0
Total Suspended Solids (kg/yr)	400	54.5	86.4
Total Phosphorus (kg/yr)	0.67	0.236	64.8
Total Nitrogen (kg/yr)	3.21	1.33	58.5
Gross Pollutants (kg/yr)	49.2	1.01	98